SIEMENS

SIMOTION

SIMOTION D4x5

Manual

Preface

Description 1

Operator control (hardware) 2

Interfaces 3

Technical Data 4

Dimension drawings 5

Spare parts/accessories 6

Standards and approvals A

ESD guidelines B

Appendix 7

Valid for SIMOTION D425, D435, and D445

08/2008 Edition

Legal information

Warning notice system

This manual contains notices you have to observe in order to ensure your personal safety, as well as to prevent damage to property. The notices referring to your personal safety are highlighted in the manual by a safety alert symbol, notices referring only to property damage have no safety alert symbol. These notices shown below are graded according to the degree of danger.

⚠DANGER
indicates that death or severe personal injury **will** result if proper precautions are not taken.

⚠WARNING
indicates that death or severe personal injury **may** result if proper precautions are not taken.

⚠CAUTION
with a safety alert symbol, indicates that minor personal injury can result if proper precautions are not taken.

CAUTION
without a safety alert symbol, indicates that property damage can result if proper precautions are not taken.

NOTICE
indicates that an unintended result or situation can occur if the corresponding information is not taken into account.

If more than one degree of danger is present, the warning notice representing the highest degree of danger will be used. A notice warning of injury to persons with a safety alert symbol may also include a warning relating to property damage.

Qualified Personnel

The device/system may only be set up and used in conjunction with this documentation. Commissioning and operation of a device/system may only be performed by **qualified personnel**. Within the context of the safety notes in this documentation qualified persons are defined as persons who are authorized to commission, ground and label devices, systems and circuits in accordance with established safety practices and standards.

Prescribed Usage

Note the following:

⚠WARNING
This device may only be used for the applications described in the catalog or the technical description and only in connection with devices or components from other manufacturers which have been approved or recommended by Siemens. Correct, reliable operation of the product requires proper transport, storage, positioning and assembly as well as careful operation and maintenance.

Trademarks

All names identified by ® are registered trademarks of the Siemens AG. The remaining trademarks in this publication may be trademarks whose use by third parties for their own purposes could violate the rights of the owner.

Disclaimer of Liability

We have reviewed the contents of this publication to ensure consistency with the hardware and software described. Since variance cannot be precluded entirely, we cannot guarantee full consistency. However, the information in this publication is reviewed regularly and any necessary corrections are included in subsequent editions.

Siemens AG
Industry Sector
Postfach 48 48
90026 NÜRNBERG
GERMANY

Copyright © Siemens AG 2008.
Technical data subject to change

Preface

Content of the Manual

This **document** is part of the **SIMOTION D4xx documentation package**.

Scope

The SIMOTION D4x5 manual is applicable to the SIMOTION D425, SIMOTION D435, SIMOTION D445 and CX32 devices.

Standards

The SIMOTION system was developed in accordance with ISO 9001 quality guidelines.

Content of the manual

The following is a description of the purpose and use of the product manual:

- Description

  Provides information about the SIMOTION system and its integration in the automation environment.
- Operator control (hardware)

  Provides information about the structure and architecture of the devices.
- Interfaces

  Provides information about the different interfaces of the devices, their pin assignment, and possible applications.
- Technical data

  Provides information about the properties and features of the devices.
- Dimension drawings
- Spare parts/accessories

  Provides information about spare parts and accessories of the SIMOTION D4x5.
- Appendix

  Provides information about the various standards and specifications fulfilled by the device.
- Index for locating information.

SIMOTION Documentation

An overview of the SIMOTION documentation can be found in a separate list of references.

This documentation is included as electronic documentation with the supplied SIMOTION SCOUT.

The SIMOTION documentation consists of 9 documentation packages containing approximately 80 SIMOTION documents and documents on related systems (e.g. SINAMICS).

The following documentation packages are available for SIMOTION V4.1 SP2:

- SIMOTION Engineering System
- SIMOTION System and Function Descriptions
- SIMOTION Diagnostics
- SIMOTION Programming
- SIMOTION Programming - References
- SIMOTION C
- SIMOTION P350
- SIMOTION D4xx
- SIMOTION Supplementary Documentation

Hotline and Internet addresses

Technical support

If you have any technical questions, please contact our hotline:

	Europe / Africa
Phone	+49 180 5050 222 (subject to charge)
Fax	+49 180 5050 223
Internet	http://www.siemens.com/automation/support-request

	Americas
Phone	+1 423 262 2522
Fax	+1 423 262 2200
E-mail	mailto:techsupport.sea@siemens.com

	Asia / Pacific
Phone	+86 1064 719 990
Fax	+86 1064 747 474
E-mail	mailto:adsupport.asia@siemens.com

Note

Country-specific telephone numbers for technical support are provided under the following Internet address:

http://www.siemens.com/automation/service&support

Calls are subject to charge, e.g. 0.14 €/min. on the German landline network. Tariffs of other phone companies may differ.

Questions about this documentation

If you have any questions (suggestions, corrections) regarding this documentation, please fax or e-mail us at:

Fax	+49 9131- 98 63315
E-mail	mailto:docu.motioncontrol@siemens.com

Siemens Internet address

The latest information about SIMOTION products, product support, and FAQs can be found on the Internet at:

- General information:
  - http://www.siemens.de/simotion (German)
  - http://www.siemens.com/simotion (international)
- Product support:
  - http://support.automation.siemens.com/WW/view/en/10805436

Additional support

We also offer introductory courses to help you familiarize yourself with SIMOTION.

Please contact your regional training center or our main training center at D-90027 Nuremberg, phone +49 (911) 895 3202.

Information about training courses on offer can be found at:

www.sitrain.com

Product disposal

SIMOTION D4x5 is an environmentally friendly product. It includes the following features:

- In spite of its excellent resistance to fire, the flame-resistant agent in the plastic used for the housing does not contain halogens.
- Identification of plastic materials in accordance with DIN 54840
- Less material used because the unit is smaller and with fewer components thanks to integration in ASICs.

For state-of-the art environmentally friendly recycling and disposal of your old modules, contact your local Siemens representative. Contact details can be found in our contacts database on the Internet at:

http://www.automation.siemens.com/partner/index.asp

Further information / FAQs

You can find further information on this manual under the following FAQs:

http://support.automation.siemens.com/WW/view/de/27585482

You can also find additional information:

- SIMOTION Utilities & Applications CD: This CD is supplied together with the SIMOTION SCOUT and, along with FAQs, also contains free utilities (e.g. calculation tools, optimization tools, etc.) and application examples (ready-to-apply solutions such as winder, cross cutter or handling).
- The latest SIMOTION FAQs are online at http://support.automation.siemens.com/WWview/de/10805436
- SIMOTION SCOUT online help
- Refer to the list of references (separate document) for additional documentation

Table of contents

Preface 3

1 Description 9

1.1 System overview 9

1.2 System components 13

1.3 Approved components for SIMOTION D 17

1.4 Representation of SIMOTION D425 and SIMOTION D435 18

1.5 Representation of SIMOTION D445 19

1.6 Nameplates 20

1.7 Safety notes 22

1.8 CompactFlash card 23
1.8.1 SIMOTION Compact Flash card 23
1.8.2 CompactFlash card 25

2 Operator control (hardware) 27

2.1 Overview of operator control and display elements 27

2.2 Operator control elements 28
2.2.1 Service and operating mode switch 28
2.2.2 RESET button 30

2.3 LED displays 31

3 Interfaces 33

3.1 Interface overview 33

3.2 DRIVE-CLiQ interfaces 34

3.3 Ethernet interfaces X120 and X130 36

3.4 Digital inputs/digital outputs 39
3.4.1 Digital inputs/digital outputs X122, X132 39
3.4.2 Use of X122 and X123 interfaces 42

3.5 Power supply X124 44

3.6 PROFIBUS DP interfaces X126 and X136 45

3.7 CompactFlash Card Slot 47

3.8 Measuring sockets X131 - X134 48

4 Technical Data 49

4.1 Technical data D4x5 49

4.2 Clock 54

4.3 D4x5 power supply 55

4.4 Information on insulation tests, safety class, and degree of protection 56

5 Dimension drawings 57
5.1 Dimension drawing of D425 and D435 57
5.2 Dimension drawing of D445 58
6 Spare parts/accessories 59
6.1 Supplemental system components 59
6.2 Fan/battery module 60
6.2.1 Cooling SIMOTION D4x5 and buffering data 60
6.2.2 Installing the fan/battery module 62
6.2.3 Replace battery in the fan/battery module 63
6.3 Terminal board TB30 64
6.4 CBE30 communication board 65
6.5 Terminal module TM31 66
6.6 Terminal module TM41 67
6.7 Terminal Module TM54F 68
6.8 Terminal modules TM15 and TM17 High Feature 69
6.9 CUA31/CUA32 control unit adapter 70
6.10 DMC20 DRIVE-CLiQ hub 71
6.11 Controller Extension CX32 72
6.12 Available spare parts and accessories 74
A Standards and approvals 75
A.1 General rules 75
A.2 Safety of electronic controllers 76
A.3 Electromagnetic compatibility 78
B ESD guidelines 79
B.1 ESD definition 79
B.2 Electrostatic charging of individuals 80
B.3 Basic measures for protection against discharge of static electricity 80
7 Appendix 81
7.1 List of abbreviations 81
Index 83

Description 1

1.1 System overview

Overview

SIMOTION D is a compact, drive-based version of SIMOTION based on the SINAMICS S120 drives family.

Two versions are available:

- SIMOTION D410 is a compact control unit for single-axis applications and is snapped on to the SINAMICS S120 PM340 Power Module in blocksize format.
- SIMOTION D4x5 is a control unit for multi-axis applications in SINAMICS S120 booksize format and is offered in several performance variants:
  - SIMOTION D425 (BASIC performance) for up to 16 axes
  - SIMOTION D435 (STANDARD performance) for up to 32 axes
  - SIMOTION D445 (HIGH performance) for up to 64 axes

This manual describes the SIMOTION D4x5 for multi-axis applications. Separate manuals are available for the SIMOTION D410 single-axis module.

Like SINAMICS S120, SIMOTION D also follows the Totally Integrated Automation (TIA) concept. TIA is characterized by integrated data management, configuration, and communication for all products and systems. Thus, an extensive toolbox of automation modules is also available for SIMOTION D.

Note

In order to cover all variants of SIMOTION D for multi-axis applications, the product will be referred to as "D4x5". Specific product designations will be used for information that applies only to one product version, e.g., D435.

Application

SIMOTION D4x5 is ideally suited to applications with many coordinated axes with high clock-pulse rates.

Typical applications include:

- Compact multiple-axis machines
- High-performance applications with short machine cycles
- Compact machines
  - Including the complete machine control in the drive
  - With extensive connection possibilities for communication, HMI and I/O
- Distributed drive concepts
  - Applications with many axes
  - Synchronization of several SIMOTION D Control Units using distributed synchronous operation

Product variants

The individual versions SIMOTION D425 (BASIC Performance), SIMOTION D435 (STANDARD performance) and SIMOTION D445 (HIGH Performance) differ in their PLC performance and motion control performance. The main distinguishing features are:

	SIMOTION D425	SIMOTION D435	SIMOTION D445
Maximum number of axes	16	32	64
Minimum servo/interpolator cycle clock	2.0 ms	1.0 ms	0.5 ms
DRIVE-CLiQ interfaces	4	4	6

SIMOTION D4x5 features PLC and motion control performance (open-loop control and motion control) for up to 16, 32 or 64 axes, as required. The computing functions integrated into the drive allow the D4x5 Control Unit to operate up to 6 servo, 4 vector or 8 V/*f* axes.

The drive control supports servo control (for a highly dynamic response), vector control (for maximum torque accuracy) and *V/f* control.

Hardware components: SIMOTION runtime module and SINAMICS drive control

As the central hardware, SIMOTION D uses the SIMOTION D4x5 as a control unit consisting of the SIMOTION runtime module and the SINAMICS drive control. The control unit uses the SINAMICS Integrated drive with various SINAMICS S120 drive modules (Line and Motor Modules) to perform open-loop and closed-loop control of the axis grouping. A range of additional SINAMICS S120 components, such as SMx encoder systems or terminal modules can be connected via DRIVE-CLiQ. With a few exceptions (e.g. no basic positioner EPos, no Basic Operator Panel BOP20, etc.) the drive control integrated in SIMOTION D has the same control characteristics and performance features as the SINAMICS S120 CU320 Control Unit. The EPos functionality is provided by the SIMOTION technology functions. The functionality of SIMOTION D can be expanded with the distributed I/O via PROFIBUS or with the CBE30 Option Module via PROFINET IO.
The following figure shows a typical SIMOTION D axis grouping.

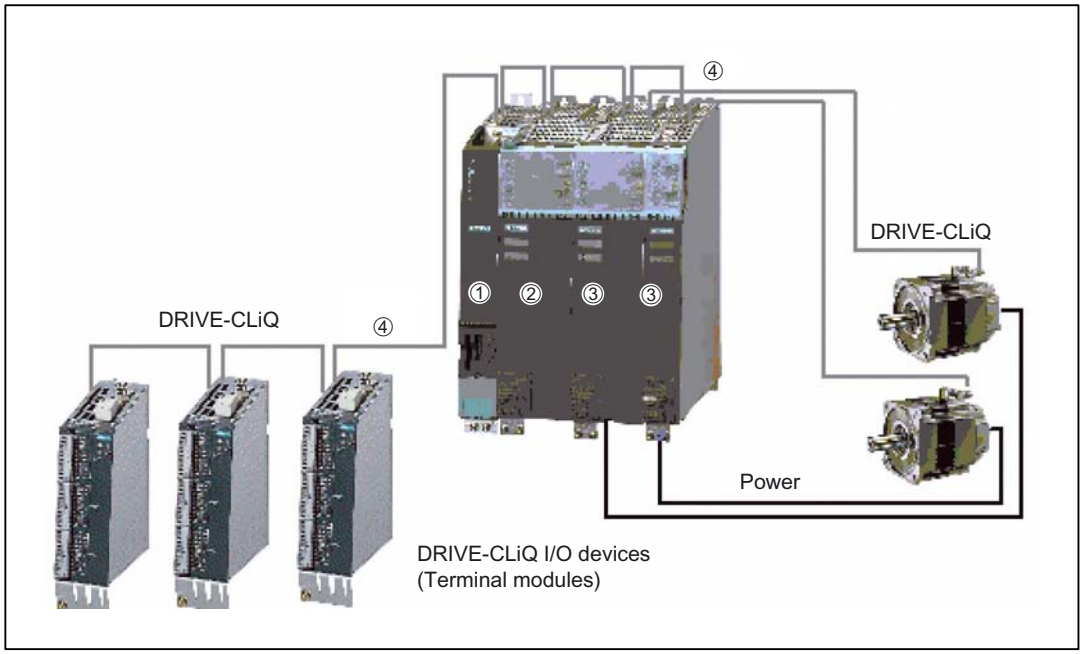

Figure 1-1 Example of a SIMOTION D4x5 axis assembly

A SIMOTION D axis grouping generally consists of the following elements:

- **SIMOTION D** (Control Unit) (1)

  This unit contains the programmable runtime system of SIMOTION and the drive software of SINAMICS S120. In principle, SIMOTION D is capable of controlling multiple axes/drives.

- One **SINAMICS infeed** (Line Module) (2)

  This module generates a DC link from the supply system.

- **SINAMICS power units** (Motor Modules) (3)

  These modules are used to control motors.

  It is also possible to operate SINAMICS Power Modules with the SINAMICS CUA adapter. A separate infeed is then unnecessary.

- **DRIVE-CLiQ components** (4)

  In SINAMICS S120/SIMOTION D, the individual components of the drive system communicate with each other via DRIVE-CLiQ. In addition to power components, encoder systems and special DRIVE-CLiQ I/O devices can also be linked via DRIVE-CLiQ.

Extension of the drive computing performance

The motion control performance of a SIMOTION D4x5 can be utilized in full by expanding the computing performance at the drive in two different ways:

- Over PROFIBUS or PROFINET, SINAMICS S120 CU320/CU310 Control Units complete with further SINAMICS S120 drive modules can be connected.
- With SIMOTION D435 and D445, the CX32 Controller Extension can be connected over DRIVE-CLiQ. This module is extremely compact and can control up to 6 servo, 4 vector or 8 V/*f* axes.

Software components: SIMOTION runtime system and SINAMICS closed-loop drive control

The basic functionality of SIMOTION D is supplied on a Compact Flash card containing the following:

SIMOTION runtime system including the following functions:

- User-programmable runtime system (IEC 61131)
- Various runtime levels (tasks)
- PLC and arithmetic functionality
- Motion control functions
- Communication functions

SINAMICS S120 drive control including the following functions:

- Closed-loop current and torque control
- Closed-loop speed control
- Closed-loop infeed

1.2 System components

Central components

SIMOTION D4x5 communicates with automation components via the following interfaces:

- PROFIBUS DP
- Ethernet
- PROFINET (when using a CBE30)
- DRIVE-CLiQ (DRIVE Component Link with IQ)

The most important components of the system and their functions are shown below.

Table 1- 1 Central components

Component	Function
SIMOTION D4x5 controller	... is the central motion control module. You can use the integrated rapid digital I/Os as: • Homing inputs • Inputs for measuring inputs • User-addressable process inputs/outputs The measuring sockets can output any analog signals.
System software	The basic functionality of SIMOTION D is supplied on a Compact Flash card containing the following: • SIMOTION Runtime (Kernel and technology packages) • Drive software of SINAMICS S120 - implements all drive functions
Power supply	... provides the electronic power supply for SIMOTION D, e.g., via the SITOP power supply.

PROFIBUS DP

The control unit can communicate with the following components via the PROFIBUS DP interfaces:

Table 1- 2 Components on PROFIBUS DP

Component	Function
Programming device (PG/PC)	... configures, parameterizes, programs, and tests with the "SIMOTION SCOUT" engineering system (ES)
SIMATIC HMI device	... is used for operating and monitoring functions. This is not an essential requirement for the operation of a control unit.
Other controllers (e.g. SIMOTION or SIMATIC)	
Additional control unit	
Distributed I/O systems	
SIMATIC ET 200M	Modular I/O system for control cabinet installation and high channel density

Component	Function
SIMATIC ET 200S	Finely scalable I/O system for control cabinet installation and particularly time-critical applications; including motor starters, safety technology and individual grouping of load groups.
SIMATIC ET 200pro	Modular I/O system with IP65/67 rating for machine-related applications with no control cabinet; with features such as compact designs, integrated PROFIsafe safety technology, PROFINET connection and live module replacement.
SIMATIC ET 200eco	I/O system with IP65/67 degree of protection for cabinet-free use close to the machine with flexible and fast ECOFAST or M12 connection methods
Other PROFIBUS I/O	
Gateways	• DP/AS-Interface link 20E and DP/AS-Interface link Advanced for the PROFIBUS DP gateway to AS-Interface • DP/DP coupler for connecting two PROFIBUS DP networks
Drive interfaces	• ADI4 (Analog Drive Interface for 4 axes) for connection of drives with analog ± 10 V setpoint interface or for external encoders • IM174 (Interface Module for 4 axes) for connection of drives with analog ± 10 V setpoint interface, for external sensors, or for connection of stepper drives with pulse-direction interface
Drive units with PROFIBUS DP interface (e.g., SINAMICS S120)	... convert speed setpoints into signals for controlling the motor and supply the power required to operate the motors. Also can be operated as an isochronous slave on PROFIBUS DP.

Ethernet

The control unit can communicate with the following components via the Ethernet interfaces or be embedded in an automation environment:

Table 1- 3 Components on the Ethernet

Component	Function
Programming device (PG/PC)	... configures, parameterizes, programs, and tests with the "SIMOTION SCOUT" engineering system (ES)
Master computer	... communicates with other devices via UDP, TCP/IP
SIMATIC HMI device	... is used for operating and monitoring functions. This is not an essential requirement for the operation of a control unit.

PROFINET

The use of a Communication Board Ethernet (CBE30) enables SIMOTION D4x5 to communicate with the following components via PROFINET:

Table 1- 4 Components on the PROFINET

Component	Function
Programming device (PG/PC)	...configures, parameterizes, programs, and tests with the "SIMOTION SCOUT" engineering system (ES)
Master computer	... communicates with other devices via UDP, TCP/IP.
SIMATIC HMI device	... is used for operator control and monitoring functions. This is not an essential requirement for the operation of a SIMOTION D4x5.
SIMATIC ET 200M	Modular I/O system for control cabinet installation and high channel densities.
SIMATIC ET 200S	Finely scalable I/O system for control cabinet installation and particularly time-critical applications; including motor starters, safety technology and individual grouping of load groups.
SIMATIC ET 200pro	Modular I/O system with IP65/67 rating for machine-related applications with no control cabinet; with features such as compact designs, integrated PROFIsafe safety technology, PROFINET connection and live module replacement.
Drive units with PROFINET interface	... convert speed setpoints into signals for controlling the motor and supply the power required to operate the motors.
Other controllers (e.g. SIMOTION or SIMATIC)	
Gateways	• IE/AS-Interface link PN IO for the PROFINET IO gateway to AS-Interface • PN/PN coupler for connecting two PROFINET IO networks

DRIVE-CLiQ

The DRIVE-CLiQ interfaces permit a fast connection to the SINAMICS drive components.

DRIVE-CLiQ offers the following advantages within the DRIVE-CLiQ topology rules:

- Independent expansion of components possible
- Automatic detection of components by the control unit
- Standardized interfaces to all components
- Uniform diagnostics down to the components
- Complete service down to the components
- Simple mechanical handling

The controller can communicate with the following components via DRIVE-CLiQ:

Table 1- 5 Components on DRIVE-CLiQ:

Component	Function
Control Unit (SINAMICS S120)	Central control module in which the open- and closed-loop control functions for the drive are implemented.
Line Module (SINAMICS S120)	... generates a DC link from the supply system.
Motor Module (SINAMICS S120)	... used to control motors (DC/AC inverters, booksize).
Power Module (SINAMICS S120)	...used to control motors (AC/DC converters, blocksize).
Controller Extension CX32	... enables additional axes to be connected for SIMOTION D435 and D445.
CUA31/CUA32 control unit adapter	...enables a blocksize power module (PM340) to be connected to a booksize control unit D4x5, CX32 or CU320.
Terminal Module TM31	... enables a terminal expansion via DRIVE-CLiQ (additional analog and digital I/Os).
Terminal Module TM41	... enables a terminal expansion (analog and digital I/Os) and encoder simulation.
Terminal Module TM54F	... enables a terminal expansion (secure digital inputs/digital outputs) for control of secure motion monitoring functions.
Terminal Module TM15, TM17 High Feature	The terminal modules TM15 and TM17 High Feature are used to implement inputs of measuring inputs and outputs of cam outputs. In addition, these terminal modules provide drive-related digital inputs and outputs with short signal delay times.
SMx sensor modules	... enable acquisition of encoder data from connected motors via DRIVE-CLiQ.
Motors with DRIVE-CLiQ interface	...allow simplified commissioning and diagnostics, as the motor and encoder type are identified automatically.
DMC20 DRIVE-CLiQ Hub	…Enables the number of DRIVE-CLiQ interfaces to be increased and the creation of a star-shaped topology.

Note

You can find detailed information about components in the SINAMICS S120 family of products in the SINAMICS S120 manuals.

Optional components

The following components enable an expansion of the functionality.

Table 1- 6 Optional components for the control unit:

Component	Function
Communication Board Ethernet CBE30	… enables communication via PROFINET IO with IRT and PROFINET IO with RT.
Terminal Board TB30	... enables a terminal expansion through plug-in of the option board (additional analog and digital I/Os).

1.3 Approved components for SIMOTION D

Note

The modules and devices approved for the SIMOTION C are listed in the *PM 21* Catalog.

For catalog order numbers, refer to the list of references (separate document).

Note

Note that not all modules in the ET 200 I/O family are approved for SIMOTION. Moreover, system-related functional differences can come into play when these I/O or I/O systems are used on SIMOTION vs. on SIMATIC. For example, special process-control functions (e.g., HART modules, etc.) are not supported by SIMOTION for the ET 200M distributed I/O system.

A detailed, regularly updated list of the I/O modules approved for use with SIMOTION, as well as notes on their use, can be found on the Internet at:

http://support.automation.siemens.com/WW/view/en/11886029

In addition to the I/O modules approved for SIMOTION, all certified standard slaves can, in principle, be connected to SIMOTION if they support the following:

- Cyclic data traffic (DP-V0) and, possibly,
- Acyclic data traffic (DP-V1) or
- Isochronous data traffic (DP-V2)

These modules are integrated via the GSD file of the device's manufacturer.

Note

Please note that in individual cases further boundary conditions must be fulfilled in order to integrate a standard slave into SIMOTION. Thus, a few modules require "driver blocks" , e.g., in the form of function blocks, that permit (or simplify) integration.

For modules enabled for SIMOTION (e.g., SIMATIC S7-300 module FM 350-1, etc.), these driver modules are part of the SIMOTION SCOUT Engineering System command library.

1.4 Representation of SIMOTION D425 and SIMOTION D435

The following figure shows the SIMOTION D425 or SIMOTION D435 with its interfaces and front panel elements (fault and status displays).

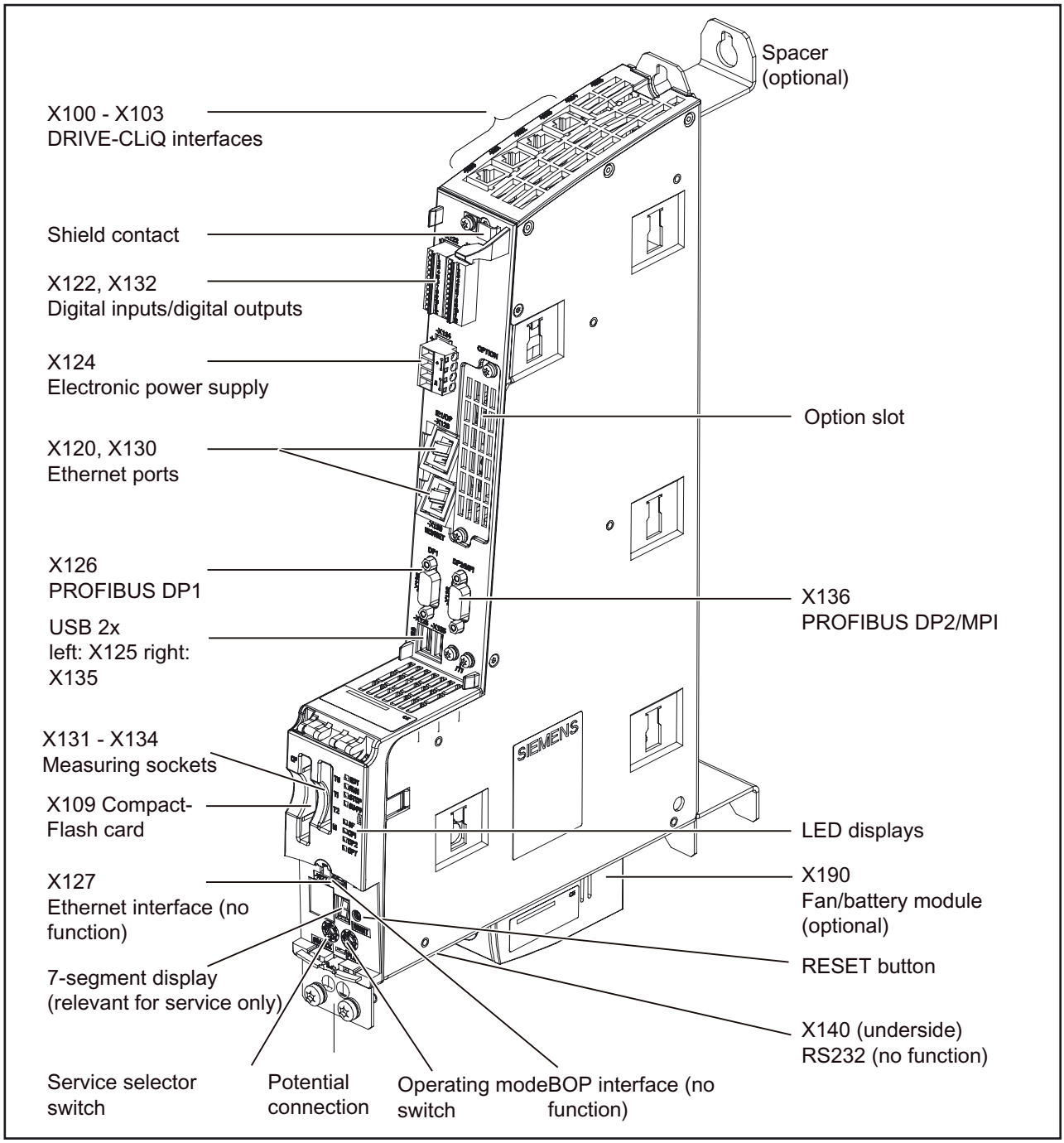

Figure 1-2 Location of interfaces and front panel elements of SIMOTION D425 and SIMOTION D435

1.5 Representation of SIMOTION D445

The following figure shows the SIMOTION D445 with its interfaces and front panel elements (fault and status displays).

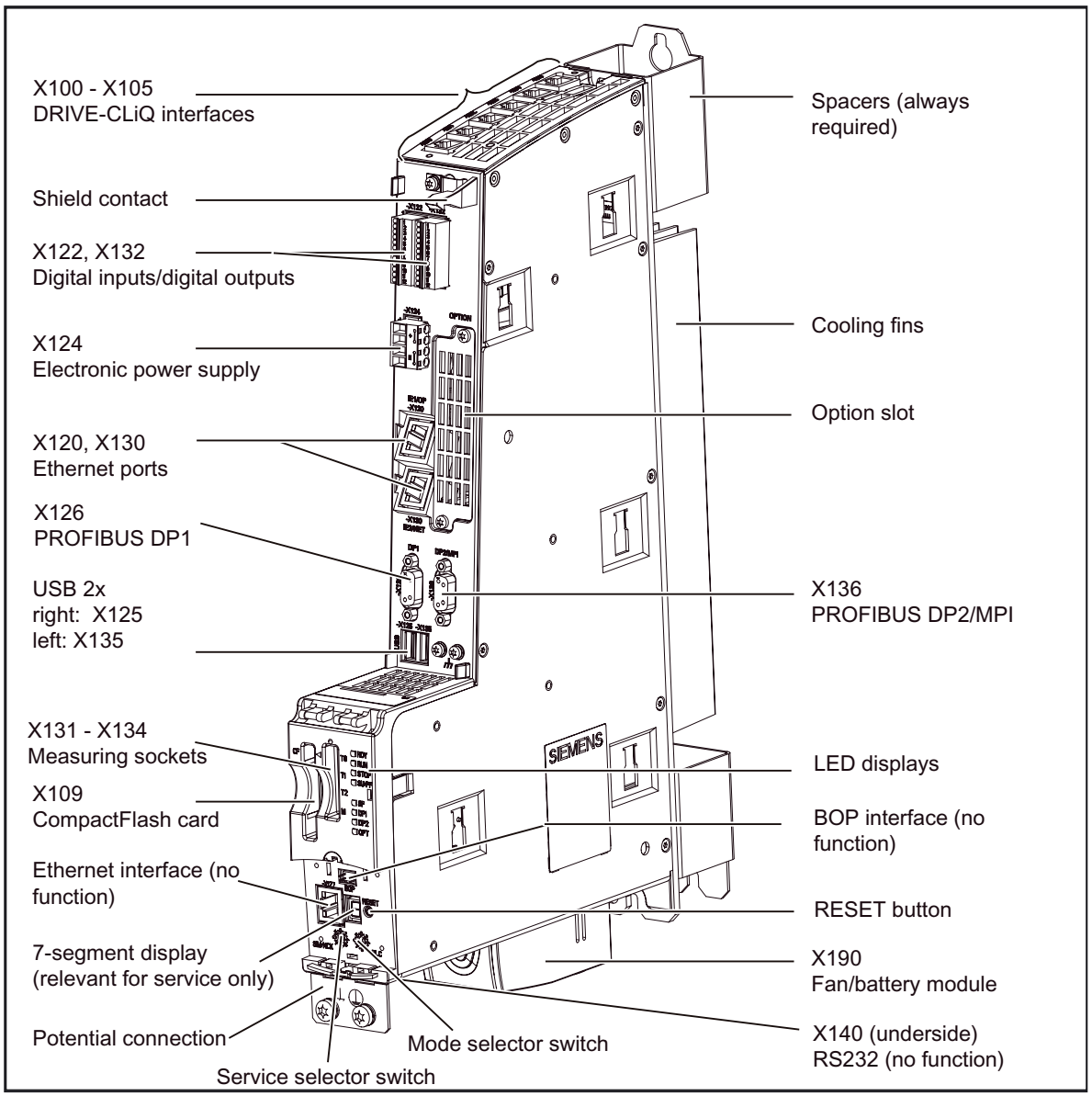

Figure 1-3 Location of interfaces and front panel elements of SIMOTION D445

⚠ CAUTION
SIMOTION D445 must be operated with a fan / battery module for heat dissipation. Without a fan/battery module, the control unit will not start up and cannot be commissioned.

A description of how to install the fan / battery module can be found in "Spare Parts / Accessories".

Note

SIMOTION D4x5 comes with preinstalled spacers. With SIMOTION D425 and D435, this can be removed if necessary.

See also

Installing the fan/battery module (Page 62)

1.6 Nameplates

Side-mounted type plate

The following figure shows you all the information included in the type plate located on the side of the unit.

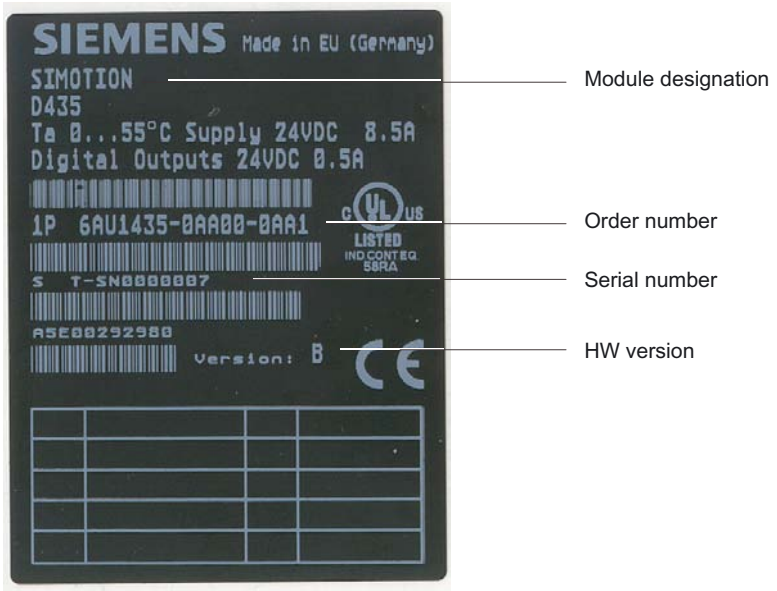

Figure 1-4 Type plate

Note

You might need to access the information provided on the side-mounted type plate after the D4x5 has been mounted. The type plate is located on the right side of the module housing and is covered by the SINAMICS S120 module. For this reason, we recommend that you make a note of the serial number of the control unit prior to assembly.

Note

The information contained in each field of the type plate on your actual control unit may differ from that presented in this manual (for example, a later product version, approvals and marks that have not yet been earned, etc., may be shown).

MAC addresses

A second type plate for the MAC addresses of the two Ethernet interfaces is attached to the front of the device. You see this type plate when you open the front cover of the control unit.

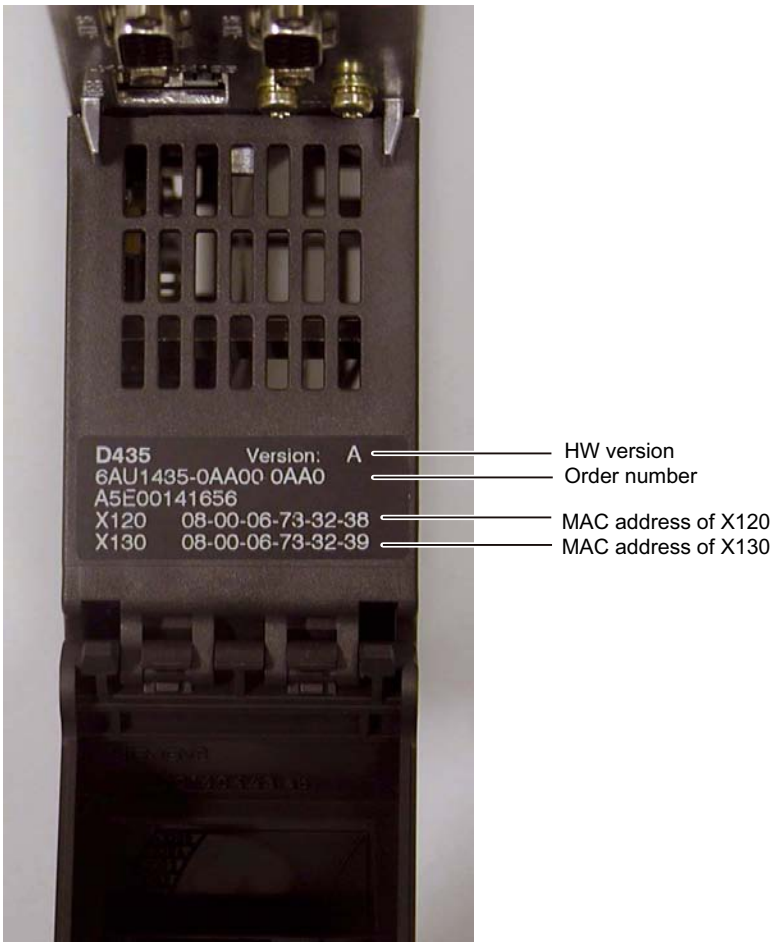

Figure 1-5 MAC addresses

1.7 Safety notes

Note the following safety information when working with the control unit and its components.

⚠ CAUTION
An option board may only be inserted and removed when the control unit and option board are disconnected from the power supply.

NOTICE
The 80 mm clearances above and below the components must be observed. The unit protects itself from overheating by shutting down.

⚠ CAUTION
The Compact Flash card may only be inserted or removed when the control unit is disconnected from the power supply.

1.8 CompactFlash card

1.8.1 SIMOTION Compact Flash card

The Compact Flash card (CF card) is inserted in the CF plug-in slot (X109 interface).

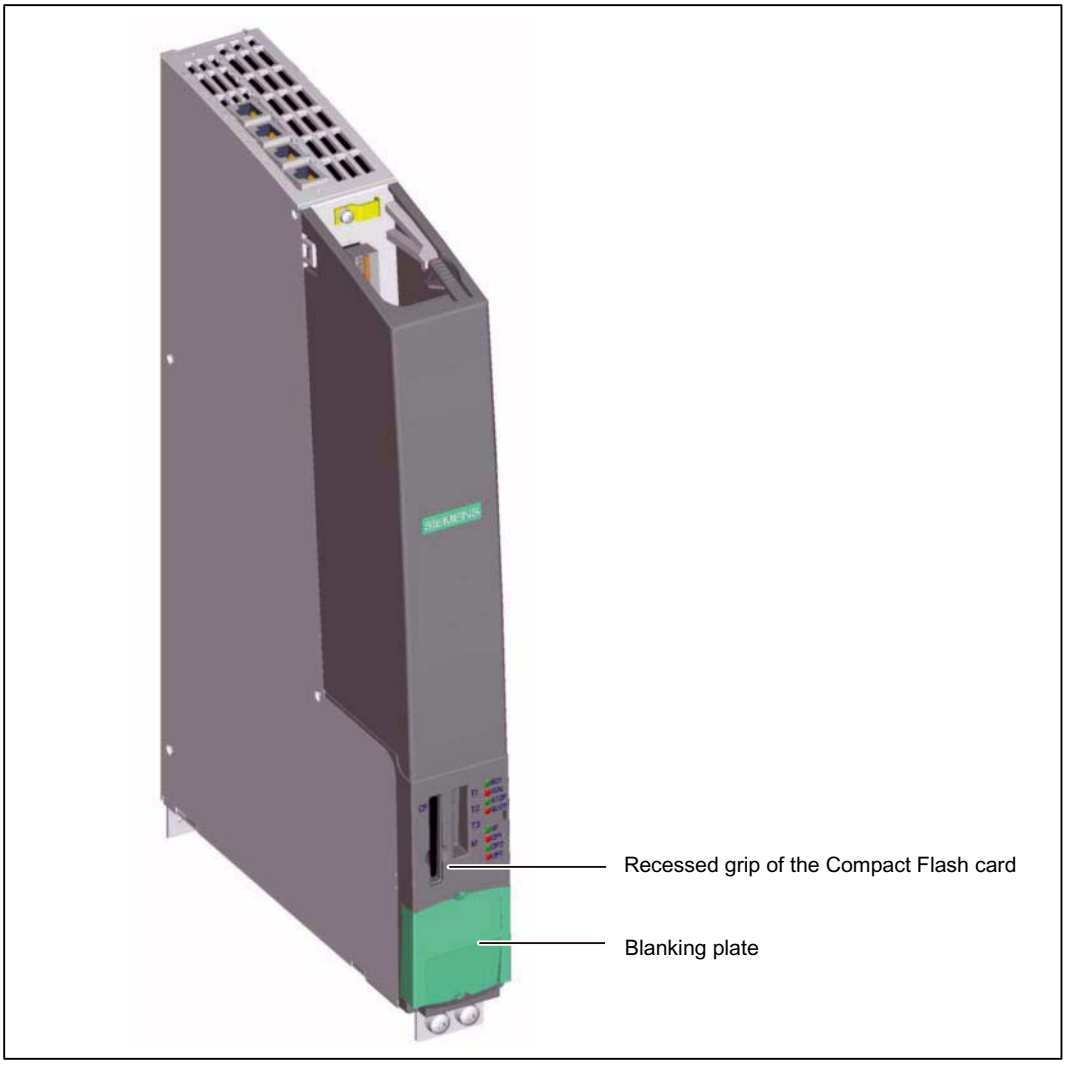

Figure 1-6 Slot for Compact Flash card

The CF card does not extent beyond the housing. An ergonomic recessed grip enables the CF card to be removed.

Properties of the CF card

The CF card is mandatory for operation of the SIMOTION D4x5. The CF card is not supplied with the SIMOTION D4x5 and must be ordered separately.

The SIMOTION Kernel and the software used to control the drives (SINAMICS firmware) are contained on the CF card.

The CF card is used for:

- Backing up the technology packages and user data (programs, configuration data, parameter assignments)
- Updates (e.g., SIMOTION firmware update)

The licenses for the technology functions are linked to the serial number of the CF card. This means the CF card can be inserted in a different SIMOTION D without having to change the licenses.

The CF card is supplied in a bootable format with the latest SIMOTION Kernel and drive software.

Note

The CF card may only be unplugged and plugged in when the system is deenergized! The SIMOTION D4x5 is in a deenergized state when all the LEDs are OFF.

Additional information

For additional information about inserting, changing, write-accessing, and formatting the CF card, refer to the *SIMOTION D4x5* commissioning manual.

1.8.2 CompactFlash card

Type plate information

The following figure shows you all the information included on the type plate of the CF card.

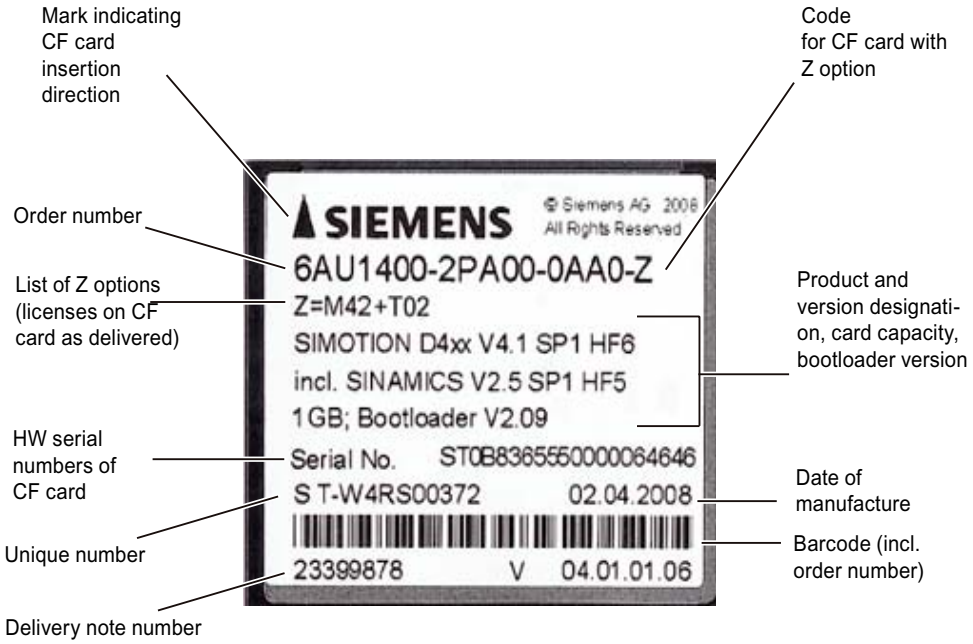

Figure 1-7 CompactFlash card

Pre-installed runtime licenses

From V4.1 SP1 HF6, pre-installed licenses are printed on the type plate of the CF card as a Z option on the label underneath the order number.

Example with Z option for D425 MultiAxes Package + two TControl licenses:

6AU1400-2PA00-0AA0-Z

Z=M42+T02

A maximum of 7 different Z options are printed on the label of the CF card. When there are more than 7 different Z options, the text "Z = see delivery order" is printed on the CF card in place of the Z options.

Available Z options / licenses for CF cards

- Axis licenses
  - Pxx-POS license and number (e.g., P02 = 2 POS licenses)
  - Gxx-GEAR license and number (e.g. G03=3 GEAR licenses)
  - Cxx-CAM license and number (e.g., C01 = 1 CAM license)
- MultiAxes Package
  - M00-MultiAxes Package license (platform independent)
  - M42-MultiAxes Package license for D425
  - M43-MultiAxes Package license for D435 (incl. D425)
  - M44-MultiAxes Package license for D445 (incl. D435 and D425)
- TControl temperature control
  - Txx-TControl license and number (e.g., T03 = 3 TControl licenses)
- SIMOTION IT
  - D00-IT DIAG license
  - X00-OPC XML-DA license
  - J00-Combined license for SIMOTION IT, comprising SIMOTION IT Virtual Machine for Java applications, SIMOTION IT DIAG and SIMOTION IT OPC XML-DA
- Safety functions
  - Fxx-License for SINAMICS Safety Integrated Extended Functions (for integrated SINAMICS drives for SIMOTION D4x5 and CX32) (e.g. F02=2 Safety Integrated Extended Functions)

Note

CF cards provided as part of a MultiAxes bundle do not have this additional labeling option. Depending on the version, a MultiAxes bundle consists of a SIMOTION D425, D435 or D445 plus a CF card with a "MultiAxesPackage" license for the relevant SIMOTION D hardware.

Operator control (hardware) 2

2.1 Overview of operator control and display elements

The following figure shows the arrangement of the operator control and display elements of a SIMOTION D4x5.

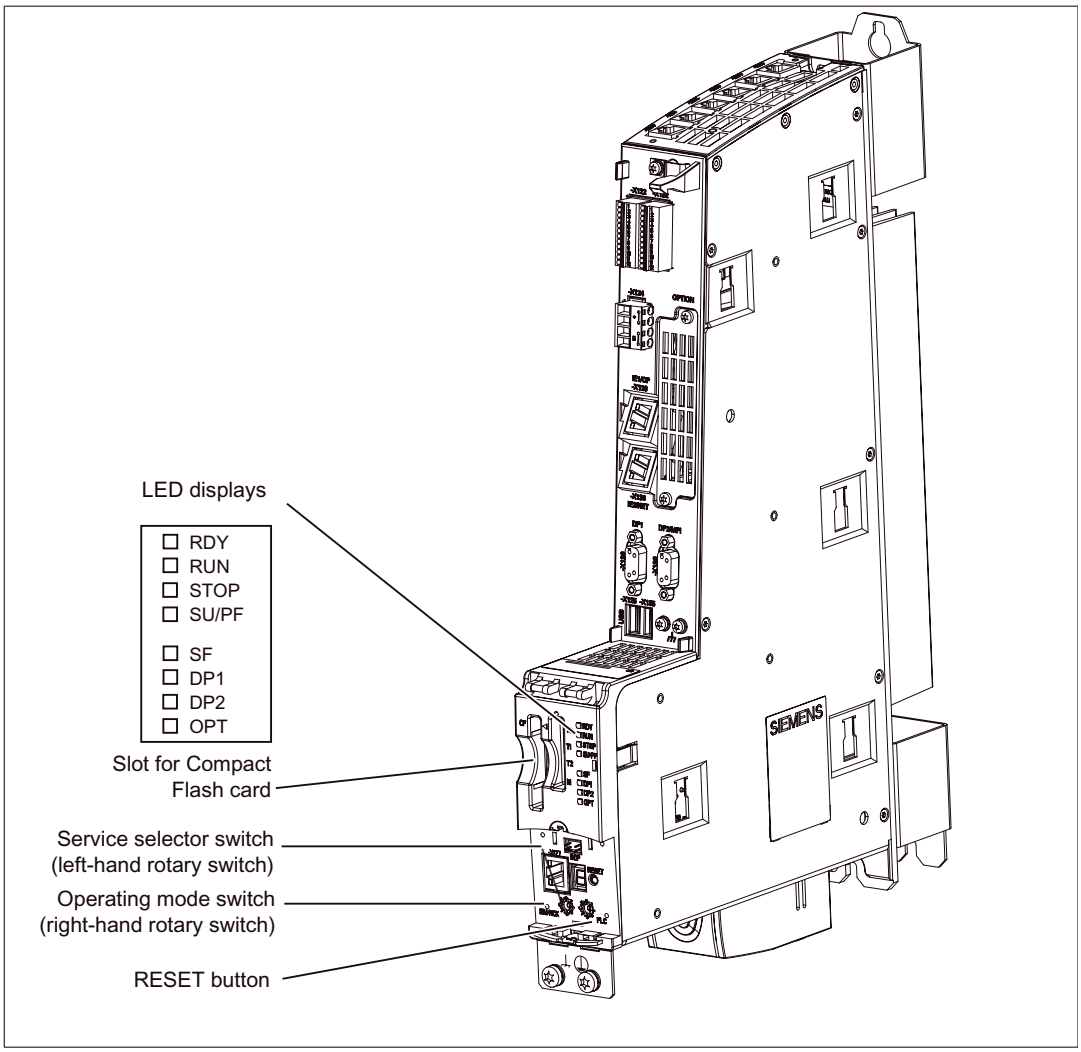

Figure 2-1 Operator control and display elements

The operator control and display elements are described below.

2.2 Operator control elements

2.2.1 Service and operating mode switch

Properties of the service and operation mode switch

SIMOTION D4x5 has a Service selector switch and an operating mode selector switch in the lower section of the front panel.

The switch on the right labeled PLC is used for switching the operating mode of the SIMOTION D4x5.

The Service selector switch on the left (labeled SIM/NCK) is for service and diagnosis functions only. In "normal" operation this switch must remain in the 0 position (see figure below).

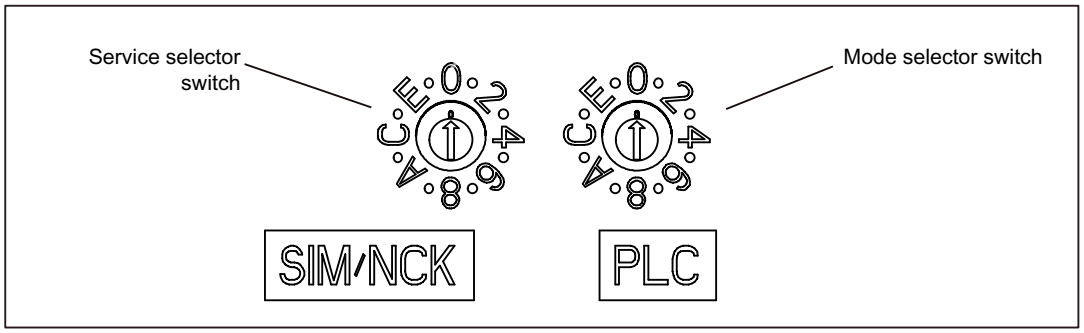

Figure 2-2 Operating mode switch and Service selector switch SIMOTION D4x5

CAUTION
Always use an insulated screwdriver to turn the rotary switch. Otherwise, static electricity can destroy the switch.

Note

It is recommended that SIMOTION SCOUT be used exclusively to switch the operating modes of the module. Therefore, leave the mode selector at position 0 (**RUN**). The LED display indicates the current mode selection.

For information on how to set the operating mode using SIMOTION SCOUT, refer to the *SIMOTION SCOUT* configuration manual.

Mode selector switch

The following table contains the possible mode selector positions and the associated LED displays. The mode selector positions are explained in the order in which they are arranged on the SIMOTION D4x5.

Table 2- 1 Mode selector position

Selector position	Meaning	LED
0	RUN	RUN
1	STOPU	SU/PF
2	STOP	STOP
3	MRES	The MRES operating modes are indicated on the STOP LED (on/off/flashing, see SIMOTION D4x5 Commissioning Manual).
Other selector positions are not assigned		

Table 2- 2 Mode selector settings

Meaning	Explanations
RUN	SIMOTION D4x5 is processing the user program and the associated system performance: • Reading process image of inputs • Processing user programs assigned to the execution system. • Writing process image of outputs The technology packages are active in this state. They can execute commands from the user program.
STOPU	SIMOTION D4x5 is not processing a user program. • The technology packages are active. Test and commissioning functions can be executed. The user program is not active. • The I/O modules are in a secure state. (this means, for example, that digital outputs are "LOW" and analog outputs are deenergized or at zero current)
STOP	SIMOTION D4x5 is not processing a user program. • It is possible to load a complete user program. • All system services (communications, etc.) are active. • The I/O modules are in a secure state. (this means, for example, that digital outputs are "LOW" and analog outputs are deenergized or at zero current) • The technology packages are inactive, i.e., all enables are deleted. No axis motions can be executed.
MRES (overall reset)	Switch setting for overall reset of the module. The MRES position can be used to perform an overall reset on the SIMOTION D4x5, thus restoring the factory settings. See the *SIMOTION D4x5* commissioning manual.

Service selector switch (V4.1 SP2 and higher)

The following table shows the possible positions of the Service selector switch. The Service selector switch positions are explained in the order in which they are arranged on the SIMOTION D4x5.

Table 2- 3 Switch positions of the Service selector switch

Selector position	Meaning
0	No service/diagnosis functions activated (default setting)
11 (hex: B)	Upgrade SIMOTION devices function (activation of downgrade function)
13 (hex: D)	Write diagnostic data to CF card

- Downgrade a SIMOTION device (switch position B)
  You can use this function to undo the "Upgrade SIMOTION devices" function
  Requirement:
  - SIMOTION D425 (6AU1 425-0AA00-0AA0) with HW revision level "F" or higher
  - SIMOTION D435 (6AU1 435-0AA00-0AA1) with HW revision level "F" or higher
  - SIMOTION D445 (6AU1 445-0AA00-0AA0)
  A BIOS update is required for SIMOTION D425 and D435 modules with a HW revision level < "F", see http://support.automation.siemens.com/WW/view/de/27585482
- Write diagnostic data to CF card (switch position D)
  This diagnostic data can provide important information following a crash of the D4x5.

Additional references

Additional information regarding the service and diagnosis functions can be found in

- *SIMOTION D4x5* commissioning manual
- *Upgrade SIMOTION devices* Function Manual
- in the SCOUT online help

2.2.2 RESET button

Arrangement

The RESET button is located behind the blanking plate on the SIMOTION D4x5.

Performing a reset operation

A reset causes the entire system to be reset and requires the system to be ramped-up again. It is similar to a "Power On Reset" except that the 24 V power supply does not have to be switched off.

2.3 LED displays

Arrangement of LED displays

The front panel of the SIMOTION D4x5 has eight LED displays arranged in two rows of four.

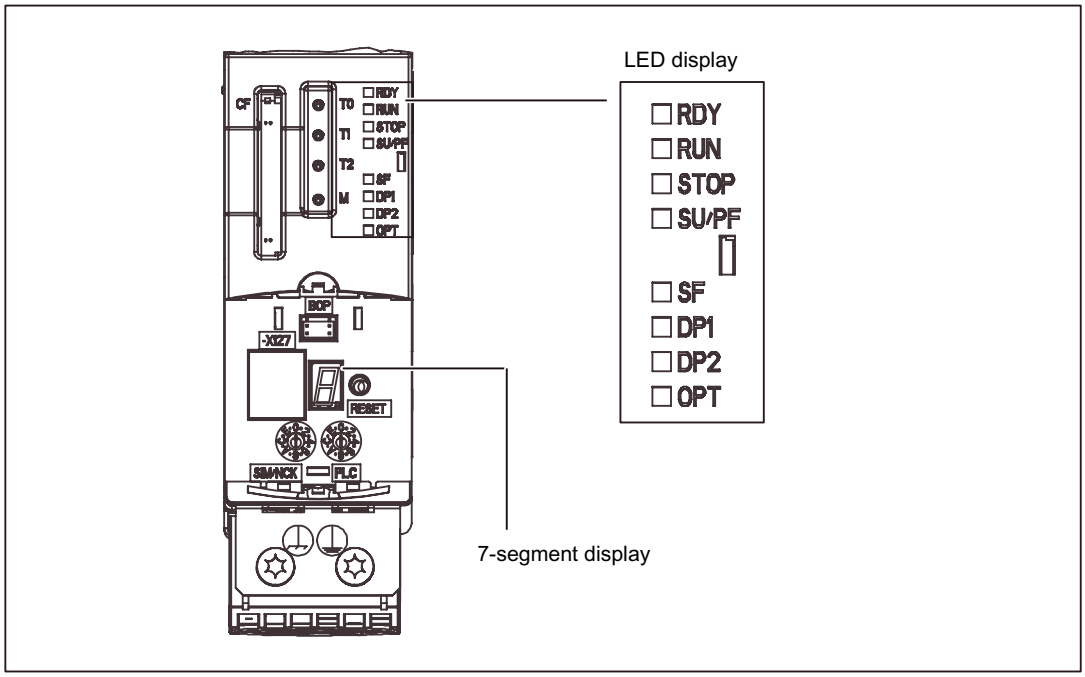

Figure 2-3 LED displays on the SIMOTION D4x5

Note

The 7-segment display is for hotline service purposes, not for diagnostic activities by the user.

Meaning of the LED displays

This table describes the LEDs and their meaning.

Table 2- 4 Error and status displays

LED	Meaning
RDY	... indicates the operating status of SIMOTION D incl. SINAMICS Integrated.
RUN	... indicates that the user program is running.
STOP	... indicates that a user program is not running. The technology packages are not active.
SU/PF	... indicates that the technology packages are active. The user program is not active.
SF	... indicates an error state of the SIMOTION D4x5.
DP1	... indicates the state of the PROFIBUS DP1 interface.
DP2	... indicates the state of the PROFIBUS DP2/MPI interface.
OPT	... indicates the state of the option module (if available).

Note

While the SIMOTION D4x5 is ramping up, all LEDs are briefly illuminated in yellow.

Additional information

You can carry out a detailed diagnosis using a PG/PC and the Engineering System. For information about diagnostics using LED displays, refer to the *SIMOTION D4x5* commissioning manual.

Interfaces 3

3.1 Interface overview

This section describes the interfaces of the SIMOTION D4x5.

Available interfaces

Table 3- 1 Overview of available external interfaces

Interface	Name	Connector type
DRIVE-CLiQ interface	X100	DRIVE-CLiQ socket
DRIVE-CLiQ interface	X101	DRIVE-CLiQ socket
DRIVE-CLiQ interface	X102	DRIVE-CLiQ socket
DRIVE-CLiQ interface	X103	DRIVE-CLiQ socket
DRIVE-CLiQ interface	X104 (D445 only)	DRIVE-CLiQ socket
DRIVE-CLiQ interface	X105 (D445 only)	DRIVE-CLiQ socket
Ethernet interface IE1/OP	X120	RJ45 socket
Ethernet interface IE2/NET	X130	RJ45 socket
Digital inputs/outputs	X122, X132	Micro Combicon 2x12-pin
Power supply connector	X124	Combicon 4-pin
PROFIBUS DP1 interface	X126	9-pin SUB-D socket
PROFIBUS DP2/MPI interface	X136	9-pin SUB-D socket
Measuring sockets (T0, T1, T2, and M)	X131 - X134	Sockets
SIMOTION CF plug-in	X109	SIMOTION CF
Fan/battery module interface	X190	Fan/battery module
1. USB interface	X125	USB socket
2. USB interface	X135	USB socket

Non-usable interfaces

Table 3- 2 Overview of interfaces that cannot be used for SIMOTION D

Interface name	Interface	Connector type
RS232 interface	X140	9-pin SUB-D pins
3. Ethernet interface (if fitted)	X127	RJ45 socket connector
Interface for BOP	-	8-pin multipoint connector

3.2 DRIVE-CLiQ interfaces

DRIVE-CLiQ interfaces

All SINAMICS S120 drive system components, including the motors and encoders, are interconnected by a shared serial interface called DRIVE-CLiQ. The use of standardized cables and connectors reduces the variety of different parts, thereby lowering storage costs.

DRIVE-CLiQ has the following properties:

- Automatic detection of components by the control unit
- Standardized interfaces to all components
- Uniform diagnostics down to the components
- Complete service down to the components
- 24 V / 450 mA per DRIVE-CLiQ interface are provided for the connection of encoders and measuring systems.

  Note: The DRIVE-CLiQ cables with 24 V supply should only be used only for components that require this (e.g., motors with a DRIVE-CLiQ interface).

Position of connectors

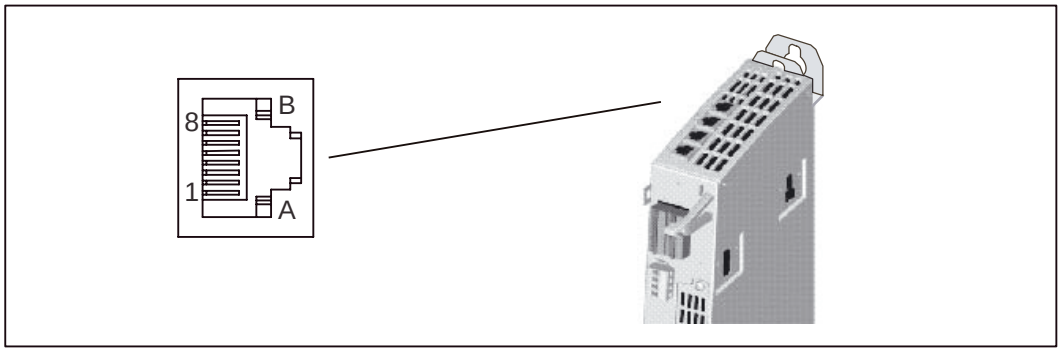

Figure 3-1 DRIVE-CLiQ interface

Features

Table 3- 3 X100 - X103 (SIMOTION D425, D435) or X100 – X105 (SIMOTION D445)

Features	Type
Connector type	DRIVE-CLiQ plug
Cable type	DRIVE-CLiQ standard (inside the control cabinet)
Cable type	MOTION CONNECT (outside the control cabinet)
Maximum cable length	100 m

DRIVE-CLiQ pin assignment

Table 3- 4 DRIVE-CLiQ interface (X100 - X103 or X100 – X105)

PIN	Signal name	Signal type	Meaning
1	TXP	O	Transmit data +
2	TXN	O	Transmit data -
3	RXP	I	Receive data +
4	----	----	Reserved, do not use
5	----	----	Reserved, do not use
6	RXN	I	Receive data -
7	----	----	Reserved, do not use
8	----	----	Reserved, do not use
A	+ (24 V)	VO	Power supply for DRIVE-CLiQ, 450 mA maximum
B	M (0 V)	VO	Ground to 24 V
Signal type: I = Input; O = Output; VO = Voltage Output			

Additional references

- *SINAMICS S120 Control Units and Additional System Components* Manual
- *SINAMICS S120 Booksize Power Units* Manual
- *SINAMICS S120 for AC Drives* Manual
- *SINAMICS S120* commissioning manual
- *Terminal Modules TM15 and TM17 High Feature* commissioning manual
- *Supplementary SINAMICS System Components for SIMOTION* Manual

For order numbers, refer to the list of references (separate document).

3.3 Ethernet interfaces X120 and X130

Interfaces for connection to Industrial Ethernet.
Industrial Ethernet is a communication network with a transmission rate of 10/100 Mbit/s.

SIMOTION D4x5 offers the following functions via Ethernet interfaces:

- Communication with STEP 7 and SIMOTION SCOUT

  With STEP 7 V5.2 and lower, the "SIMATIC NET SOFTNET-PG (Protocol TPC/IP RFC 1006)" software must be installed on the PG/PC. With STEP 7 V5.3 and higher, additional software is not needed.

- Communication between SIMOTION and SIMATIC NET OPC

  The "SIMATIC NET SOFTNET-S7 (S7-OPC server)" software must be installed on the PG/PC for this function.

- Connection of HMI systems
- Communication with other devices over TCP/IP or UDP communication
- IT communication (using SIMOTION IT DIAG, SIMOTION IT OPC XML-DA, SIMOTION IT Virtual Machine software options)

Note

SOFTNET-S7 is a superset of SOFTNET-PG, i.e., SOFTNET-S7 contains Protocol TPC/IP RFC 1006, as well.

For more information regarding the software packages, see *Catalog PM 21*, refer to the list of references (separate document) for the order number.

Position of connectors

The following figure shows the mounting position and designation of the Ethernet connectors on the module.

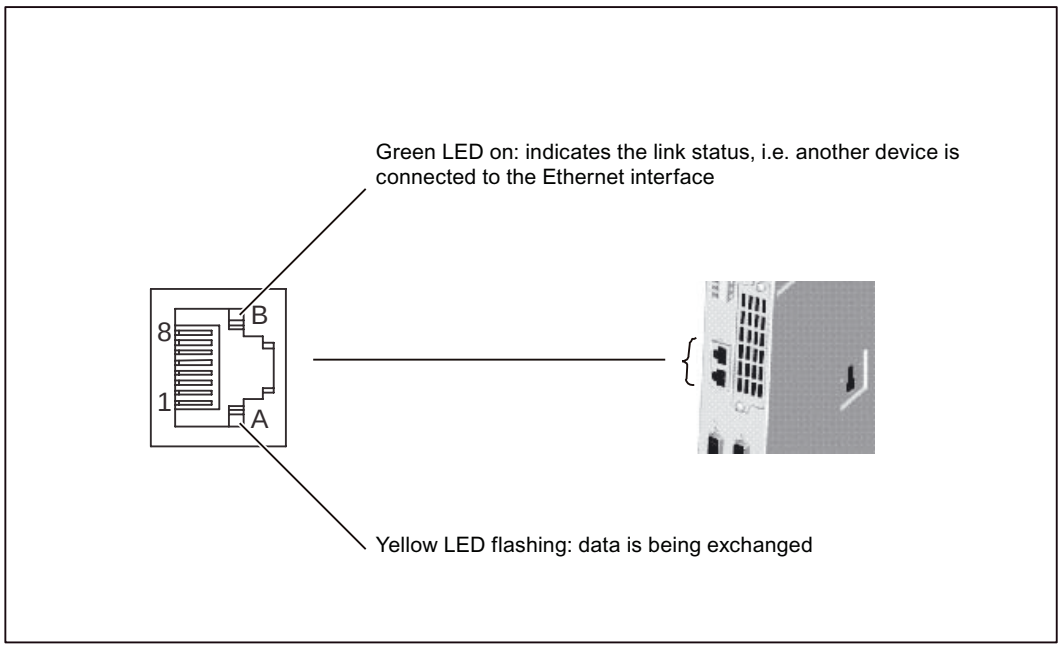

Figure 3-2 Ethernet interface

Interface features

Table 3- 5 X120 and X130

Features	Type
Connector type	RJ45 socket connector
Cable type	Industrial Ethernet cable
Maximum cable length	100 m
Autocrossing	no
Other	The X120 and X130 interfaces are full-duplex 10/100-Mbit Ethernet ports. Both ports are wired as Ethernet terminals.[1)]

[1)] Devices with Ethernet interfaces can have various pin assignments. In the case of terminal devices, for example, the send line may be on pins 1 and 2, while pins 1 and 2 on a switch or hub may connect to the receive line. If two devices are connected using Ethernet, the type of device will dictate whether a crossed or uncrossed Ethernet cable needs to be used. (For example, a crossed cable is required if two Ethernet terminal devices are directly connected.)

Pin assignment

Table 3- 6 Ethernet interfaces (X120 and X130)

Pin	Signal name	Signal type	Meaning
1	TXP	Output	Ethernet transmit differential signal
2	TXN	Output	Ethernet transmit differential signal
3	RXP	Input	Ethernet receive differential signal
4	---	---	Reserved, do not use
5	---	---	Reserved, do not use
6	RXN	Input	Ethernet receive differential signal
7	---	---	Reserved, do not use
8	---	---	Reserved, do not use

Note

The MAC addresses are imprinted on an adhesive label that is located behind the protective cover and can be seen from the front.

Note the following if you want to connect a PG/PC using Ethernet:

- If your PG/PC has an autocrossing function, crossed and uncrossed Ethernet cables can be used.
- If your PG/PC does not have autocrossing, a crossed Ethernet cable must be used.
- If a hub or switch is located in between, an uncrossed Ethernet cable must be used (assuming the hub/switch does not have autocrossing).

3.4 Digital inputs/digital outputs

3.4.1 Digital inputs/digital outputs X122, X132

Interface features

Sensors and actuators can be connected to the X122, X132 connector via digital inputs and outputs.

Table 3- 7 Interfaces X122 and X132

Features	Type
Connector type	Micro Combicon
Connection possibility	Up to 0.25 mm^2
Current rating (ground)	4 A, maximum

Position of connectors

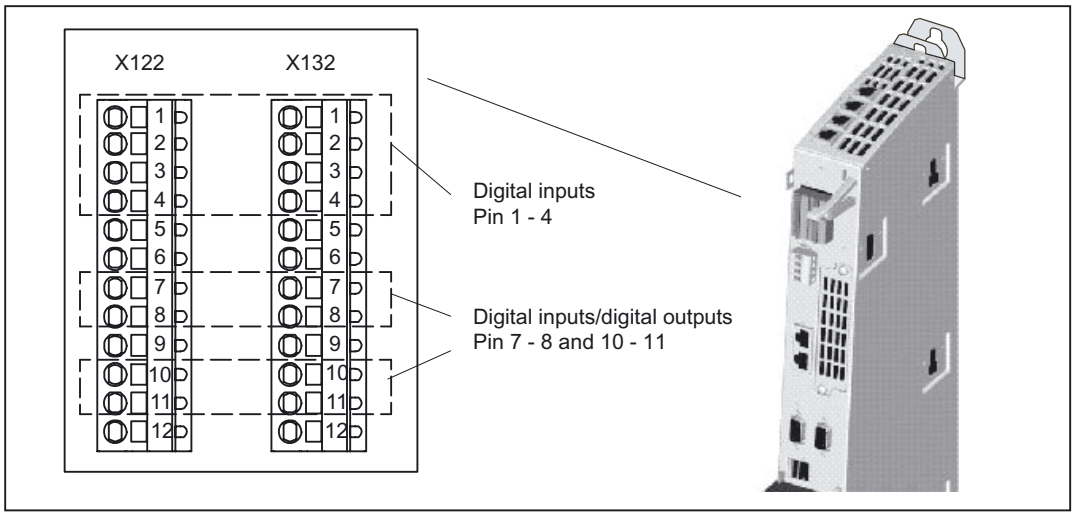

Figure 3-3 Digital inputs and digital inputs/digital outputs (interfaces X122 and X132)

Wiring and block diagram for SIMOTION D4x5

The following figure shows the wiring diagram and the block diagram of the digital inputs and digital inputs/outputs of the SIMOTION D4x5.

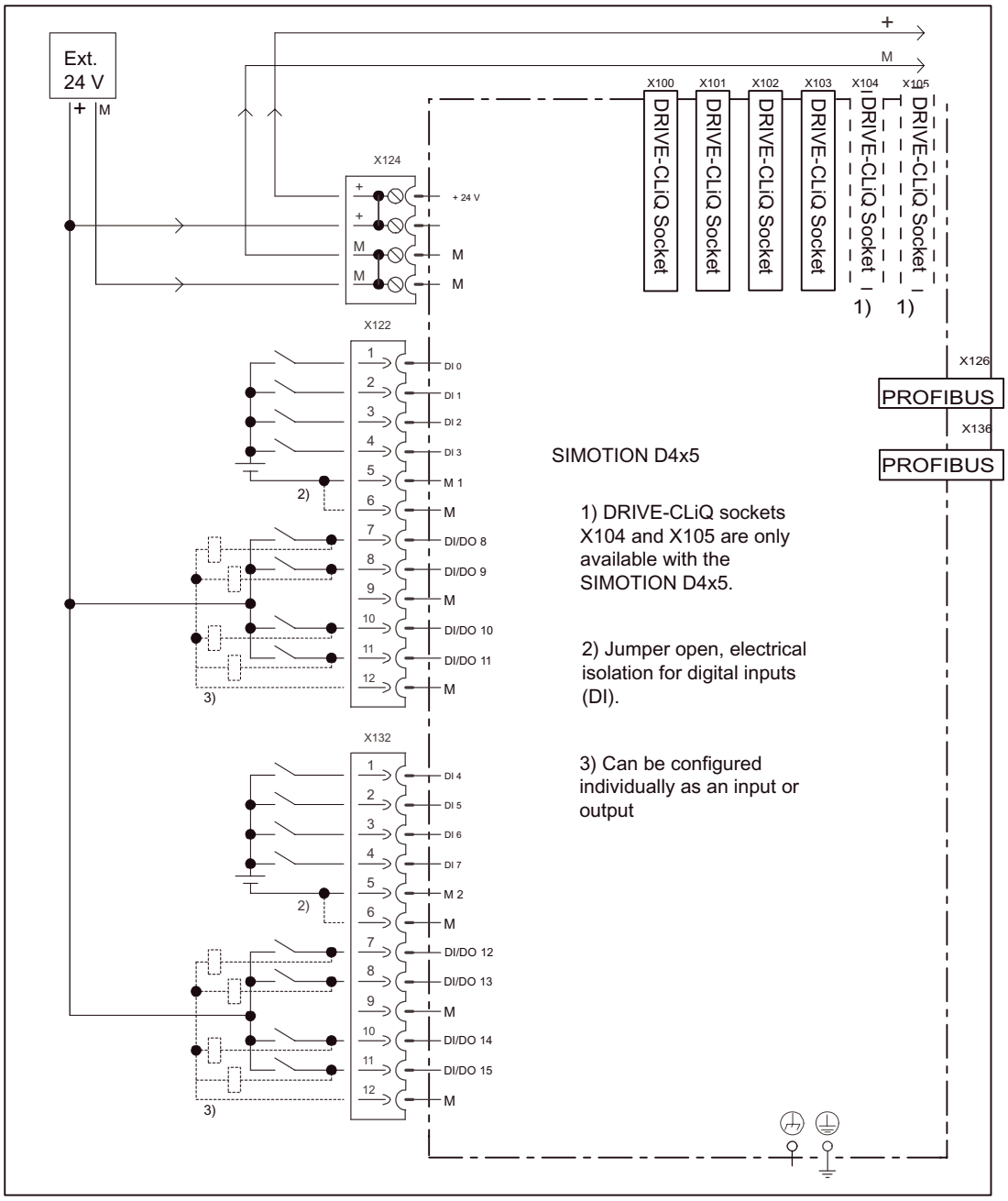

Figure 3-4 Wiring diagram and block diagram of the digital inputs/outputs

Interface assignment of X122 and X132

Table 3- 8 Digital inputs/digital outputs X122

Pin	Designation [1]	Signal type [2]	Notes
1	DI0	I	Digital input 0
2	DI1	I	Digital input 1
3	DI2	I	Digital input 2
4	DI3	I	Digital input 3
5	M1	GND	Ground for DI0 – DI3 (electrically isolated relative to M)
6	M	GND	Ground
7	DI/DO8	B	Digital input/digital output 8 (high-speed DO)
8	DI/DO9	B	Digital input/digital output 9 (high-speed DI/DO)
9	M	GND	Ground
10	DI/DO10	B	Digital input/digital output 10 (high-speed DI/DO)
11	DI/DO11	B	Digital input/digital output 11 (high-speed DI/DO)
12	M	GND	Ground

[1] DI: digital input; DI/DO: bidirectional digital input/output; M or GND: Electronics ground; M1: Ground reference

[2] B = Bidirectional; I = Input; GND = Reference potential (ground)

Table 3- 9 Digital inputs/digital outputs X132

Pin	Designation [1]	Signal type [2]	Notes
1	DI4	I	Digital input 4
2	DI5	I	Digital input 5
3	DI6	I	Digital input 6
4	DI7	I	Digital input 7
5	M2	GND	Ground for DI4 – DI7 (electrically isolated relative to M)
6	M	GND	Ground
7	DI/DO12	B	Digital input/digital output 12 (high-speed DO)
8	DI/DO13	B	Digital input/digital output 13 (high-speed DI/DO)
9	M	GND	Ground
10	DI/DO14	B	Digital input/digital output 14 (high-speed DI/DO)
11	DI/DO15	B	Digital input/digital output 15 (high-speed DI/DO)
12	M	GND	Ground

[1] DI: digital input; DI/DO: bidirectional digital input/output; M or GND: electronics ground; M2: Functional ground

[2] B = Bidirectional; I = Input; GND = Reference potential (ground)

Note

An open input is deemed to be "Low".
To enable the digital inputs to work, terminal M1 or M2 must be connected. The following alternatives are available:

- Connect the carried digital input reference ground to M1 or M2.
- Insert a bridge between terminals M and M1 (or between M and M2).
  This removes the electrical isolation for these digital inputs.

3.4.2 Use of X122 and X123 interfaces

Connecting sensors and actuators

Digital inputs and digital outputs can be used to connect various sensors and actuators to the two 12-pin X122 and X132 front panel connectors.

The following types of digital inputs/digital outputs are used:

- Digital inputs
- Bidirectional digital inputs/digital outputs

Bidirectional digital inputs and outputs can be configured individually as digital inputs or outputs.

Assignment of the inputs/outputs to functions can be parameterized as required. Special functions (e.g. probe input and output cam) can be assigned to the inputs/outputs.

The enables for the drive units and/or motors (Active Line Module, Motor Module) connected to the control unit can, for example, be switched using the digital inputs.

Digital inputs

The control unit has 8 digital inputs.

The isolated inputs can be used as freely addressable inputs.

Bidirectional digital inputs/digital outputs

The control unit has 8 digital inputs/digital outputs (DI/DO).

When the DI/DO are assigned as digital inputs, they can be used as follows:

- DI/DO9 to 11 and DI/DO13 to 15 can be used as "high-speed inputs" for probes.

  With a signal edge at the relevant input, the current actual values of one or more encoders are measured with positioning accuracy to determine lengths or distances.

  The assignment of the inputs is not fixed, and the special use is activated in the SIMOTION SCOUT engineering system.
- The 8 digital inputs/outputs can be used as user-addressable inputs or as inputs for external zero marks (max. 6 inputs, DI/DO9 to 11 and DI/DO13 to 15).

When the DI/DO are assigned as digital outputs, they can be used as follows:

- Use as user-addressable outputs
- Use as "rapid output cam"

Note

Shielded cables are required when connecting probes or external zero marks for optimal noise immunity.

Additional references

For information on commissioning the DI/DO as user-addressable I/O, measuring inputs or cam outputs, see the SIMOTION D4x5 Commissioning Manual.

For information on the commissioning and function of the technology objects TO probes, TO cams and TO cam tracks, see the SIMOTION Output Cams and Measuring Inputs Function Manual.

3.5 Power supply X124

This interface is provided exclusively for connection of the external power supply.

Note

When an external power supply is used (e.g. SITOP), the ground potential must be connected to the protective conductor system (PELV).

Features of the interface

Table 3- 10 Interface X124

Features	Type
Connector type	Combicon
Connection possibility	Up to 2.5 mm^2
Current carrying capacity	10 A, maximum
Maximum cable length	10 m

Interface assignments

Table 3- 11 Power supply X124

Pin	Signal name	Signal type	Meaning
1	P24	VI	Power supply 24 V
2	P24	VI	24 V power supply
3	M	VO	Ground
4	M	VO	Ground
Signal type: VI = Voltage input (power supply) VO = Voltage output (power supply)			

Note

The 24 V is looped through via the 24 V connector. In this case, pin 1 is jumpered with pin 2, and pin 3 is jumpered with pin 4.

Position of power supply interface

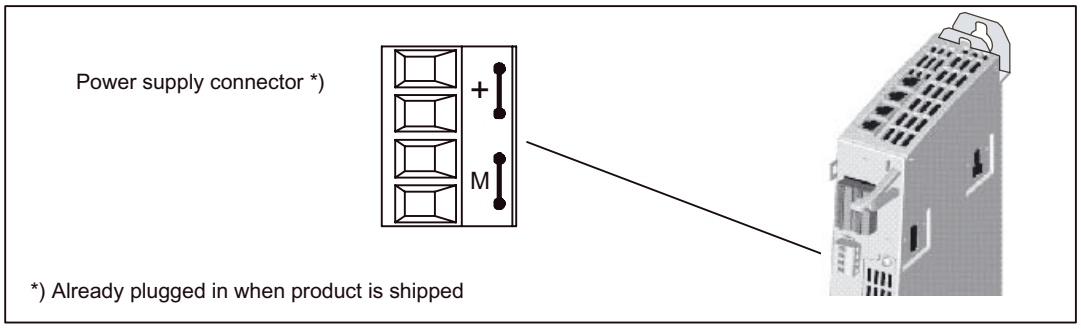

Figure 3-5 Power supply interface

3.6 PROFIBUS DP interfaces X126 and X136

Features of the interface

Table 3- 12 Interfaces X126 and X136

Features	Type
Connector type	9-pin SUB-D socket
Cable type	PROFIBUS cable
Maximum cable length	100 m for 12 Mbits

Interface assignment for X126

Table 3- 13 PROFIBUS DP interface X126

Pin	Signal name	Signal type	Meaning
1	--	--	Reserved, do not use
2	M	VO	Ground to P24_SERV
3	1RS_DP	B	RS-485 differential signal
4	1RTS_DP	O	Request to send
5	1M	VO	Ground to 1P5
6	1P5	VO	5 V power supply for bus terminal, external, short-circuit proof
7	P24_SERV	VO	24 V for teleservice, short-circuit proof, 150 mA maximum
8	1XRS_DP	B	RS-485 differential signal
9	--	--	Reserved, do not use
Signal type: VO = Voltage output (power supply) O = Output B = Bidirectional			

Interface assignment for X136

Table 3- 14 PROFIBUS DP interface X136

Pin	Signal name	Signal type	Meaning
1	--	--	Reserved, do not use
2	M	VO	Ground to P24_SERV
3	2RS_DP	B	RS-485 differential signal
4	2RTS_DP	O	Request to send
5	1M	VO	Ground to 1P5
6	1P5	VO	5 V power supply for bus terminal, external, short-circuit proof
7	P24_SERV	VO	24 V for teleservice, short-circuit proof, 150 mA maximum
8	2XRS_DP	B	RS-485 differential signal
9	--	--	Reserved, do not use
The 1P5 voltage is provided exclusively for the bus terminal. No OLPs are permitted.			
Signal type: VO = Voltage output (power supply) O = Output B = Bidirectional			

Position of connectors

The following figure shows the mounting position and designation of the connectors on the control unit.

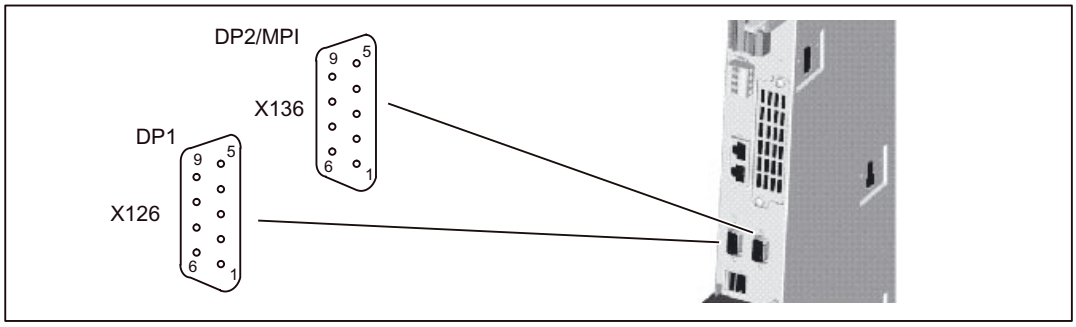

Figure 3-6 Position of connectors X126, X136

Connectable devices

The following devices can be connected to the PROFIBUS DP interfaces:

- Programming devices/PCs
- SIMATIC HMI devices
- SIMATIC S7 controllers with PROFIBUS DP interface
- Distributed I/O
- Teleservice adapter
- Drive units with PROFIBUS DP interface (standard slaves)

Note

A teleservice adapter can only be connected to one of the two interfaces.

A detailed, regularly updated list of the modules approved for use with SIMOTION, as well as notes on their use, can be found on the Internet at http://support.automation.siemens.com/WW/view/de/11886029.

Take note of the documentation on the individual modules or devices!

3.7 CompactFlash Card Slot

Features

Type: 50-pin socket connector

This interface should only be used to insert a special SIMOTION Compact Flash card (CF card).

Consult the relevant references for detailed information about the SIMOTION CF card.

See also

SIMOTION CompactFlash Card (Page 25)

3.8 Measuring sockets X131 - X134

Application

The measuring sockets are used to output analog signals. Any interconnectable signal can be output to any measuring socket on the control unit.

⚠ CAUTION
The measuring sockets should be used exclusively for servicing purposes. The measurements may only be performed by appropriately trained specialists. The measuring sockets are suited for multiple-spring wire connectors with a diameter of 2 mm.

Measuring socket position

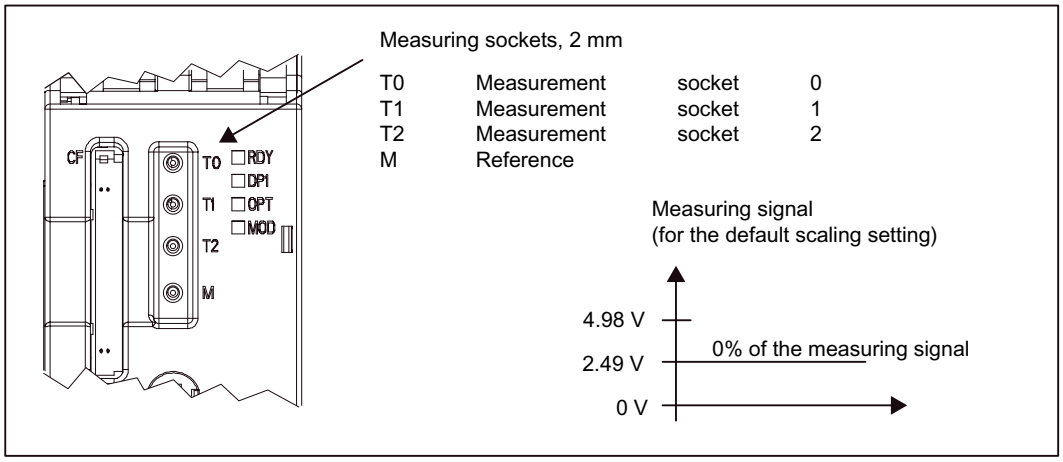

Figure 3-7 Measuring socket arrangement

Technical Data

4

4.1 Technical data D4x5

Memory for system data

Table 4- 1 Memory for system data and the memory size

Data	SIMOTION D425 memory size	SIMOTION D435 memory size	SIMOTION D445 memory size
Diagnostic buffer	200 messages	200 messages	200 messages
RAM (working memory) [1]	25 MB 35 MB (from V4.1 SP2)	25 MB 35 MB (from V4.1 SP2)	50 MB 70 MB (from V4.1 SP2)
RAM disk (load memory)	17 MB	17 MB	23 MB
Retentive memory	320 KB	320 KB	320 KB
Persistent memory (user data on CF) [2]	300 MB	300 MB	300 MB

[1] For Java applications, a dedicated 20 MB working memory will be available from V4.1 SP2.
[2] These figures relate to CF cards with a capacity of 512 MB and 1 GB. If the "Upgrade SIMOTION devices" function is used, the downgrade option requires CF cards with double the memory requirement for "each switch position". The 300 MB persistent memories can therefore only be achieved with the 1 GB CF card.

CompactFlash card

Table 4- 2 CF card

Memory capacity	512 MB (order no. 6AU1400-2NA00-0AA0) 1 GB (order no. 6AU1400-2PA00-0AA0)
Weight	7 g

With CompactFlash cards, SIMOTION versions up to and including V4.1 SP1 inc. hotfixes support a memory address of max. 512 MB. This limitation applies both to their use by the SIMOTION runtime functions as well as any other use, e.g. storage of documents.
If there is more than 512 MB of data on the CompactFlash card, then the card is full as far as SIMOTION runtime is concerned, i.e.:

- SIMOTION runtime cannot write any further data
- SIMOTION runtime cannot read data beyond the 512 MB limit.

Dimensions and weight

Table 4- 3 Dimensions and weight of a D4x5

Parameter	SIMOTION D445 values	SIMOTION D445 values
Dimensions W x H x D [mm] • excl. fastening using spacers, no fan or battery modules • incl. fastening using spacers, no fan or battery modules (max. expansion)	• 50 x 380 x 230 • 50 x 380 x 270	• Not possible (spacers always required) • 50 x 380 x 270
Weight of SIMOTION D [g]	Approximately 2500	Approximately 3600

Ambient conditions

Table 4- 4 D4x5 environmental requirements

Parameters	Values
Permissible ambient temperature • Storage and transport • Operation	• -40° C to +70° C • 0 °C to +55 °C up to 2000 m above sea level Starting at an altitude of 2000 m, the maximum ambient temperature decreases by 7 °C every 1000 m
Permissible relative humidity (without condensation)	5 % ... 95 %
Installation altitude	Up to 5000 m above sea level
Organic/biological influences • Storage • Transport • Operation	• Class 1B1 according to EN 60 721-3-1 • Class 2B1 according to EN 60 721-3-2 • Class 3B1 according to EN 60 721-3-3
Pollution degree	2 according to EN 60 664-1
Degree of protection to EN 60529 (IEC 60529)	IP20
Atmospheric pressure	700...1060 hPA

PLC and motion control performance

Table 4- 5 Maximum number of axes and minimum cycles for D4x5

Data	SIMOTION D425	SIMOTION D435	SIMOTION D445
Maximum number of axes	16	32	64
Minimum PROFIBUS cycle	2 ms	1 ms	1 ms
Minimum PROFINET transmission cycle	0.5 ms	0.5 ms	0.5 ms
Minimum servo/interpolator cycle clock	2.0 ms	1.0 ms	0.5 ms

Integrated drive control

Table 4- 6 Controls for integrated drives

Data	SIMOTION D425	SIMOTION D435	SIMOTION D445
Max. number of axes for integrated drive control (servo / vector / V/f)	6 / 4 / 8 (alternative)	6 / 4 / 8 (alternative)	6 / 4 / 8 (alternative)

Communication

Table 4- 7 Interface communication

Data	SIMOTION D425	SIMOTION D435	SIMOTION D445
DRIVE-CLiQ interfaces	4	4	6
Ethernet ports	2	2	2
PROFIBUS interfaces	2	2	2
PROFINET interfaces	Optionally over CBE30: • 1 interface with 4 ports • Supports PROFINET IO with IRT and RT • Can be configured as PROFINET IO controller and/or device	Optionally over CBE30: • 1 interface with 4 ports • Supports PROFINET IO with IRT and RT • Can be configured as PROFINET IO controller and/or device	Optionally over CBE30: • 1 interface with 4 ports • Supports PROFINET IO with IRT and RT • Can be configured as PROFINET IO controller and/or device

General technical data

Table 4- 8 Technical data (general)

Data	SIMOTION D 425	SIMOTION D 435	SIMOTION D 445
Fan	Optional fan/battery module	Optional fan/battery module	Fan/battery module part of scope of supply
Supply voltage • Rated value • Permissible range	 24 VDC 20.4 to 28.8 V	 24 VDC 20.4 to 28.8 V	 24 VDC 20.4 to 28.8 V
Current consumption, typically [1]	600 mA	600 mA	2 A
Starting current, typ.	6 A	6 A	6 A
Power loss	15 W	15 W	48 W

[1] with no load on inputs/outputs, no 24V supply via DRIVE-CLiQ I/O or PROFIBUS interface

Digital Inputs

Table 4- 9 Digital inputs on SIMOTION D4x5

Data	SIMOTION D425	SIMOTION D435	SIMOTION D445
Digital Inputs	8	8	8
Input voltage			
• Rated value	24 VDC	24 VDC	24 VDC
• At signal "1"	15...30	15...30	15...30
• At signal "0"	-3 to +5 V	-3 to +5 V	-3 to +5 V
Galvanic isolation	Yes, in groups of 4 [1]	Yes, in groups of 4 [1]	Yes, in groups of 4 [1]
Current consumption typ. at 1 signal level	10 mA at 24 V	10 mA at 24 V	10 mA at 24 V
Input delay, typ. (hardware)	L->H: 50 µs H->L: 100 µs	L->H: 50 µs H->L: 100 µs	L->H: 50 µs H->L: 100 µs

[1] Reference potential is terminal M1 or M2

Digital inputs/outputs (parameterizable)

Table 4- 10 Digital inputs/outputs on SIMOTION D4x5

Data	SIMOTION D425	SIMOTION D435	SIMOTION D445
Digital Inputs	8 max. 6 as high-speed probe inputs, max. 8 as high-speed cam outputs	8 max. 6 as high-speed probe inputs, max. 8 as high-speed cam outputs	8 max. 6 as high-speed probe inputs, max. 8 as high-speed cam outputs
If used as an input:			
• Input voltage, rated value	24 VDC	24 VDC	24 VDC
• Input voltage with signal "1"	15...30	15...30	15...30
• Input voltage with signal "0"	-3 to +5 V	-3 to +5 V	-3 to +5 V
Galvanic isolation	no	no	no
Current consumption typ. at 1 signal level	10 mA at 24 V	10 mA at 24 V	10 mA at 24 V
Input delay, typ. (hardware)	L->H: 50 µs (5 µs when used as probe input) H->L: 100 µs (50 µs when used as probe input)	L->H: 50 µs (5 µs when used as probe input) H->L: 100 µs (50 µs when used as probe input)	L->H: 50 µs (5 µs when used as probe input) H->L: 100 µs (50 µs when used as probe input)
Probe input, accuracy	5 µs	5 µs	5 µs
If used as an output			
• Rated load voltage, permissible range	24 VDC, 20.4 to 28.8 V	24 VDC, 20.4 to 28.8 V	24 VDC, 20.4 to 28.8 V
• Electrical isolation	no	no	No
• Current load, max.	500 mA per output	500 mA per output	500 mA per output
• Residual current, max.	2 mA	2 mA	2 mA
• Output delay, max. (hardware)	L->H: 400 µs H->L: 100 µs	L->H: 400 µs H->L: 100 µs	L->H: 400 µs H->L: 100 µs
• Cam input, accuracy	125 µs	125 µs	125 µs
Switching frequency of the outputs, max.			
• with resistive load	100 Hz	100 Hz	100 Hz
• With inductive load	2 Hz	2 Hz	2 Hz
• For lamp load	11 Hz	11 Hz	11 Hz
Short-circuit protection	yes	yes	yes

Other technical data

Table 4- 11 Non-volatile data backup

Data	SIMOTION D425	SIMOTION D435	SIMOTION D445
• Backup time, min. • Charging Time, typ.	5 days (real-time clock/SRAM backup) A few minutes	5 days (real-time clock/SRAM backup) A few minutes	5 days (real-time clock/SRAM backup) A few minutes
• Approvals	cULus (File No. E164110)	cULus (File No. E164110)	cULus (File No. E164110)

4.2 Clock

Features of real-time clock

The following table lists the properties and functions of the SIMOTION D clock.

Table 4- 12 Clock features

Features	Meaning
Type	Hardware clock (integrated "realtime clock")
Default setting when delivered	DT#1994-01-01-00:00:00
Accuracy With supply voltage on • 0 to 55° C With supply voltage off • 25° C • -20° C to 70° C	Max. deviation per day: • ±9 s • ±2 s • +2 s to -9 s
Backup time at least	• 5 days (at 0 to 25° C) • with fan/battery module 3 years
Charging time	A few minutes
Backup	Maintenance-free SuperCap or battery in fan/battery module

With power OFF

In the power OFF state, the SIMOTION D clock continues to run during the the backup time (with the exception of the software clock). The buffer is recharged in the power ON state.

An error message is output if the backup function is defective. When the power is switched ON, the clock then resumes at the time set at the factory. When the control unit is reset to the factory setting, the clock is also reset to the "factory default setting".

4.3 D4x5 power supply

External 24 V power supply

Power is supplied to the control unit by an external 24 V power supply (e.g., SITOP).

The tolerance range for the SIMOTION D4x5 is between DC 20.4 and 28.8 V.

Table 4- 13 Input voltage specification

	Input voltage		Typ. current consumption [1]		Maximum current consumption	
	D425 and D435	D445	D425 and D435	D445	D425 and D435	D445
Minimum input voltage	20.4 V	20.4 V	0.7 A	2.35 A	9.8 A	10.6 A
Nominal Input voltage	24 V	24 V	0.6 A	2.0 A	8.4 A	9.0 A
Maximum input voltage	28.8 V	28.8 V	0.5 A	1.67 A	7.0 A	7.5 A

[1] with no load on inputs/outputs (no 24V supply via DRIVE-CLiQ I/O or PROFIBUS interface)

Note

A primary-side voltage dip for 20 ms must not cause the voltage on the secondary side (24V) to fall below the minimum permissible input voltage for the control unit.

Additional references

Recommended power supply units and tables for calculating the current consumption for the assembly with SINAMICS S120 modules can be found in the "Cabinet Construction and EMC Booksize" chapter in the *SINAMICS S120 Booksize Power Units* Manual.

4.4 Information on insulation tests, safety class, and degree of protection

Test voltages

During the routine test, the insulation resistance is tested at the following test voltage in accordance with IEC 1131 Part 2:

Table 4- 14 Test voltages

Circuits with rated voltage Ue relative to other circuits or ground	Test voltage
0 V < Ue ≤ 50 V	500 VDC

Class of protection

Safety class I in accordance with VDE 0106, Part 1 (IEC 536), i.e. a protective-conductor terminal is required on the mounting rail.

Protection against ingress of solid foreign bodies and water

Degree of protection IP 20 in accordance with IEC 529, i.e., protection against contact with standard probes.

Also: Protection against ingress of solid foreign bodies with diameters greater than 12.5 mm.

No special protection against ingress of water.

Dimension drawings

5

5.1 Dimension drawing of D425 and D435

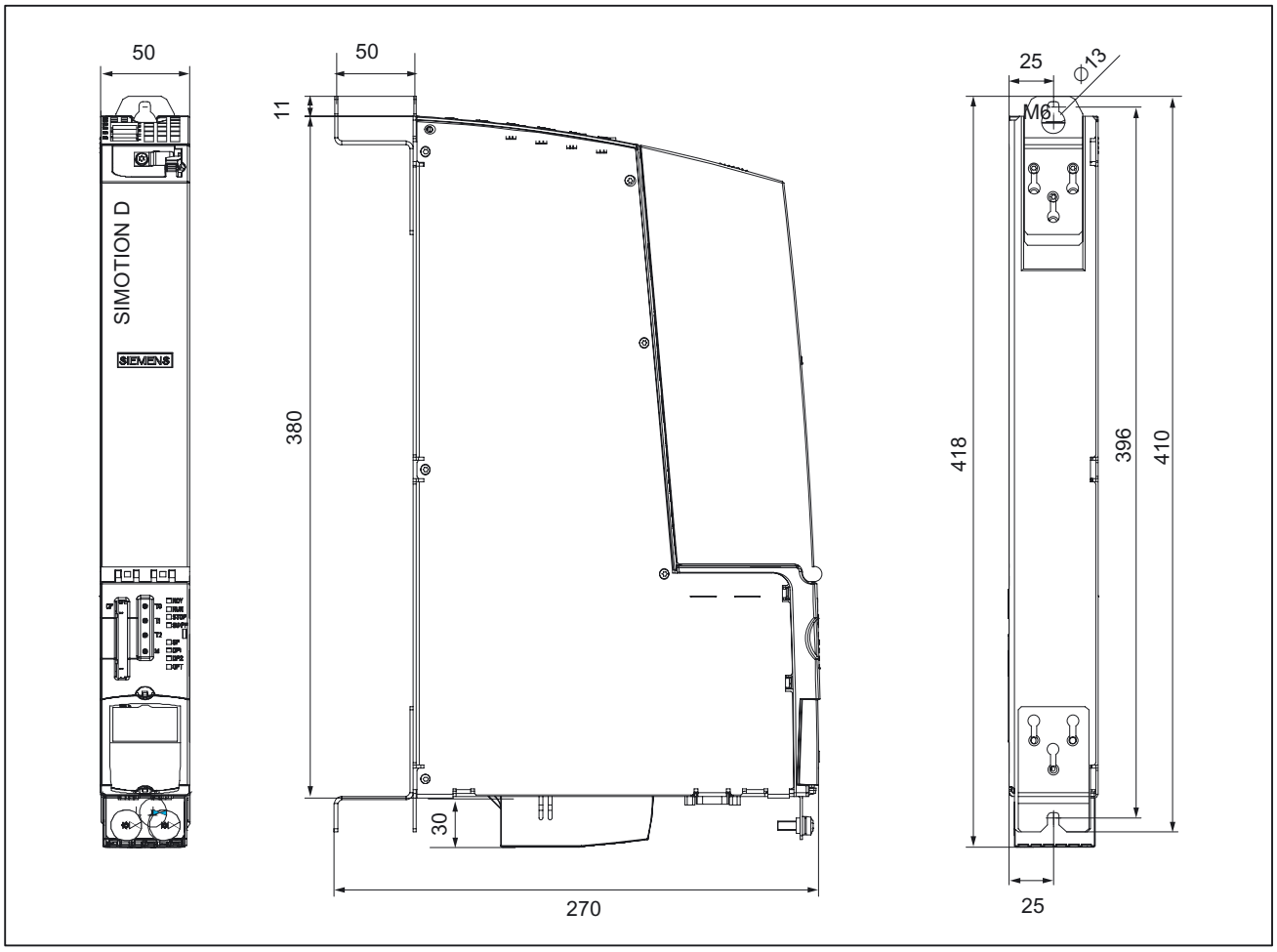

Figure 5-1 Dimension drawing of SIMOTION D425 and SIMOTION D435

The SIMOTION D425/D435 can also be operated without a fan/battery module.

5.2 Dimension drawing of D445

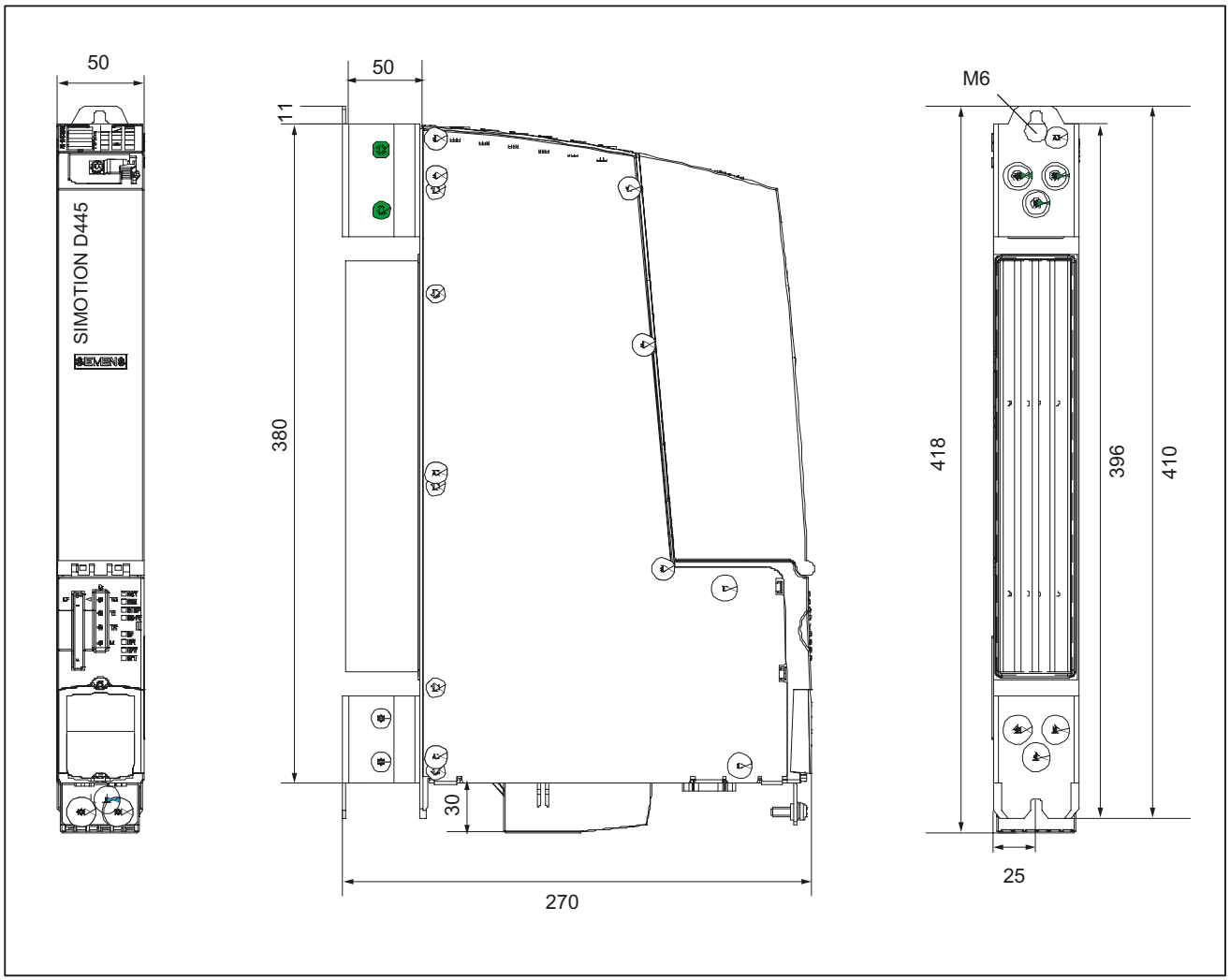

Figure 5-2 Dimension drawing of SIMOTION D445

The SIMOTION D445 must always be operated with a fan/battery module.

NOTICE
The 80 mm clearances above and below the components must be observed. The unit protects itself from overheating by shutting down.

Spare parts/accessories

6

6.1 Supplemental system components

Connection options for supplemental system components

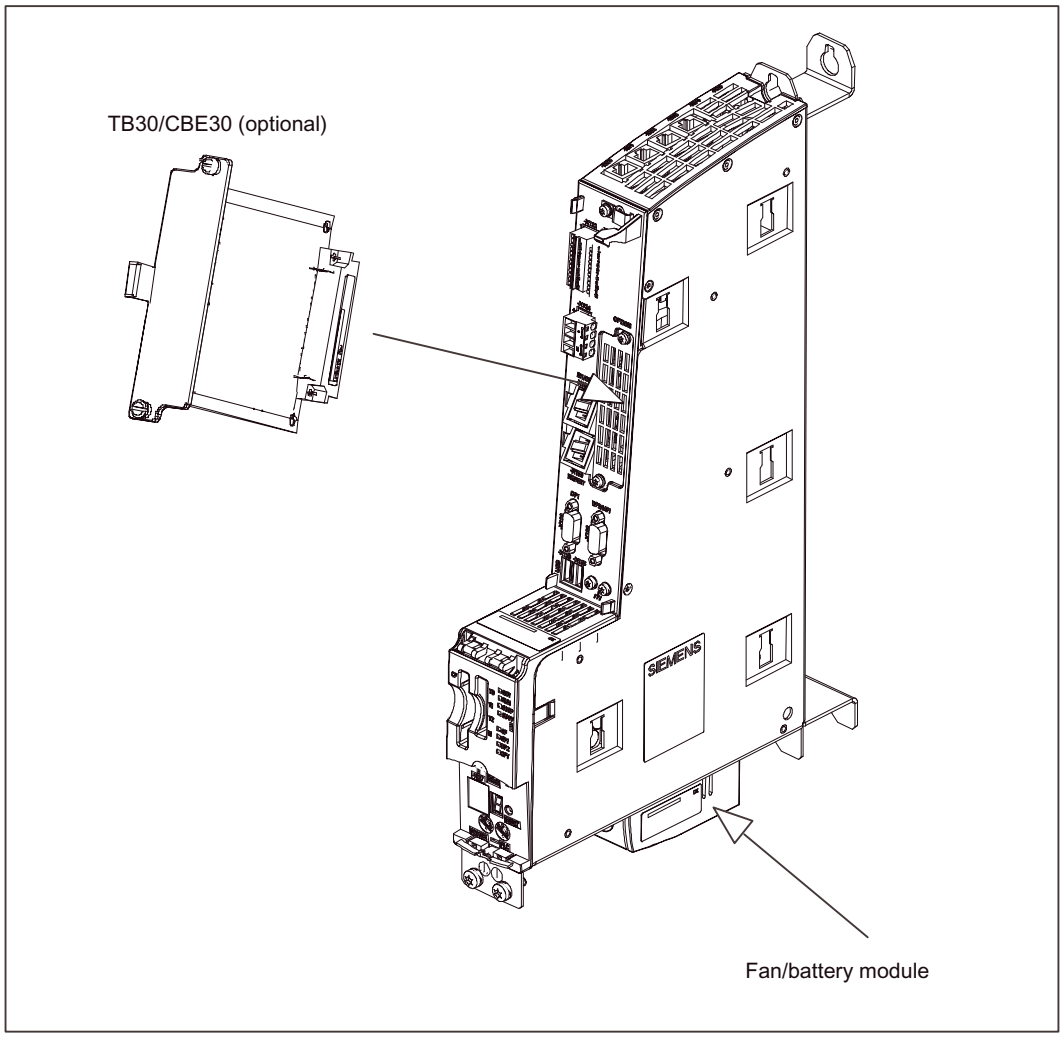

Figure 6-1 Position of supplemental system components

6.2 Fan/battery module

6.2.1 Cooling SIMOTION D4x5 and buffering data

Cooling SIMOTION D4x5 and buffering data

Functions of a fan/battery module

The fan/battery module can perform the following tasks:

- CPU cooling
- Buffering of the SRAM and the real-time clock if the SuperCap is insufficient.

The control unit monitors the temperature and the functioning of the fan.

Cooling the SIMOTION D4x5

If there is insufficient free convection for heat dissipation of the control unit and the air intake temperature rises outside the permitted range, an external fan/battery module must be fitted to the bottom of the module. This module can be installed without further measures on a control unit where there is insufficient ventilation in the control cabinet.

Table 6- 1 Fan/battery module for SIMOTION D4x5

Properties	SIMOTION D425	SIMOTION D435	SIMOTION D445
Fan/battery module	Optional	Type 6AU1435-0AA00-0AA1: Optional Type 6AU1435-0AA00-0AA0: always required above an air	intake temperature of 43 °C
Max. permissible air intake temperature	55°C	55°C	55°C
Fan control	switches on when air intake temperature exceeds approx. 43°C	switches on when air intake temperature exceeds approx. 43°C	The fan runs all the time

NOTICE
The 80 mm clearances above and below the components must be observed. The unit protects itself from overheating by shutting down.

Buffering data

For the retentive storage of process variables, the SIMOTION D4x5 has SRAM memory that is **backed up**by SuperCap to protect against a power failure. This backup is stored for at least 5 days. There are two options for storing retentive data for a longer period:

- the system command **_savePersistentMemoryData**to store retentive data on the CompactFlash Card (CF) of the SIMOTION D4x5
  - Backing up of data when installing a spare part
  - Backing up data when a battery is not going to be used
- Use of the fan/battery module
  - Supplied with the SIMOTION D445
  - Optional in the case of SIMOTION D425/D435

Note

The backup time when a battery is used is at least 3 years. For the replacement part case, you should back up the SRAM data additionally on the CF card via the application ("_savePersistentmemorydata"). Temperature faults are recorded and signaled by the control.

Battery

A 3 V lithium battery can be inserted in the fan/battery module. The battery is preassembled with an approximately 4 cm long cable with plug. The appropriate mating connector is attached to a small printed circuit board for connection in the fan/battery module.

See also

List of available spare parts and accessories (Page 74)

Replace battery in the fan/battery module (Page 63)

6.2.2 Installing the fan/battery module

Procedure

Two plastic rails for installing this module are located on the underside of the control unit. Proceed as follows to install the fan/battery module:

1. If required, insert a battery in the fan/battery module.
2. Hold the fan/battery module at an angle to the front with the open side facing up (battery visible).
3. Push the plastic guide into the cutouts on the underside of the control unit.
4. Tilt the fan/battery module up until the front latching device snaps into place.

   The electrical connection between the fan/battery module and the control unit is made automatically.

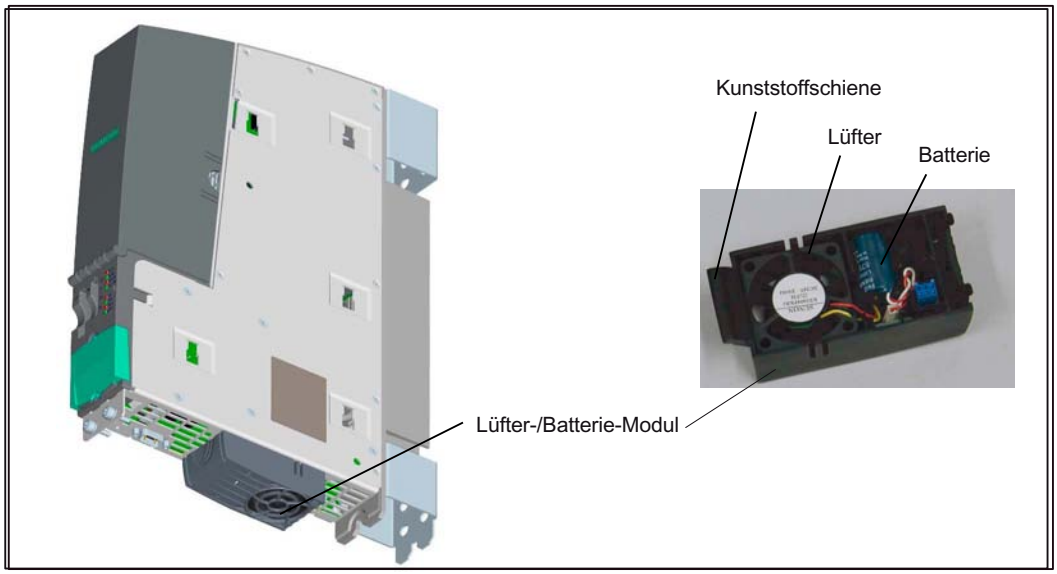

Figure 6-2 Installing the fan/battery module

6.2.3 Replace battery in the fan/battery module

Procedure

Proceed as follows to replace the battery:

1. Gently press the fan/battery module backwards.

   This detaches the module from its front latching device.
2. Tilt the fan/battery module forwards at an angle and pull out the plastic guide from the control unit cutout.
3. Remove the battery using a screwdriver (at the side) and disconnect the battery from the module by unplugging the connector.
4. Connect the cable plug connector of the new battery to the mating connector in the fan/battery
   module and push the battery in.

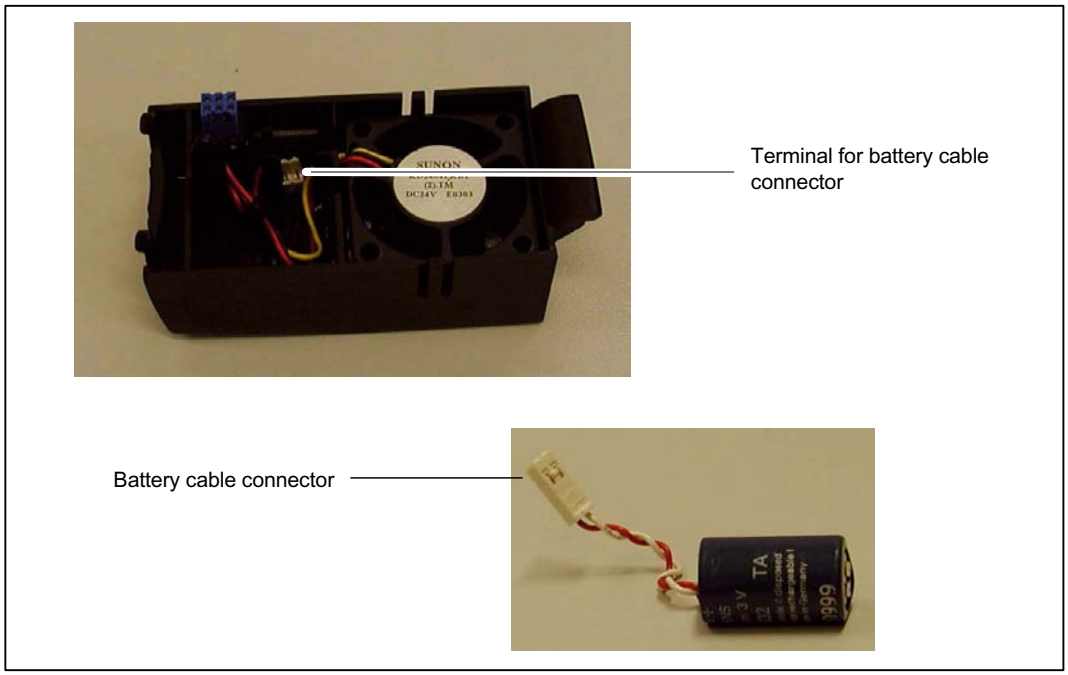

Figure 6-3 Change the battery in the fan/battery module

5. Hold the fan/battery module at an angle to the front with the open side facing up (battery visible).
6. Push the plastic guide into the cutout on the underside of the control unit.
7. Tilt the fan/battery module up until the front latching device snaps into place.

   The electrical connection between the fan/battery module and the control unit is made automatically.

Note

The fan/battery module may only be replaced when the device is in the power OFF state. The battery should be replaced at least once every 3 years, and whenever the warning level is reached (see SIMOTION D4x5 Commissioning Manual).

Delaying the replacement of the battery may result in the loss of retained data!

6.3 Terminal board TB30

Features of the TB30

The TB30 is a terminal expansion module that can be inserted in the D4x5.

The TB30 contains the following terminals:

Table 6- 2 Overview of TB30 interface

Interface	Quantity
Digital inputs	4
Digital outputs	4
Analog inputs	2
Analog outputs	2

⚠ CAUTION

The option board may only be inserted and removed when the D4x5 control unit and the TB30 option board are deenergized.

Additional references

You will find detailed information about the TB30 Option Board in the

- *Supplementary SINAMICS System Components for SIMOTION* Manual
- *SIMOTION D4x5* Commissioning Manual

6.4 CBE30 communication board

Features of the CBE30

The Ethernet communication board (CBE30) for SIMOTION D4x5 enables connection to a PROFINET IO network. The SIMOTION D4x5 then assumes the role of a PROFINET IO Controller and can perform the following:

- PROFINET IO Controller, I-Device (also controller and device simultaneously)
- 100 Mbit/s full duplex/autocrossing
- Supports real-time classes of PROFINET IO:
  - RT (Real Time)
  - IRT (Isochronous Real Time)

The CBE30 has a X1400 interface with an integral 4-port switch based on PROFINET ASICs ERTEC400.

⚠ CAUTION
The communication board may only be inserted and removed when the D4x5 control unit and the CBE30 communication board are deenergized.

Additional references

You will find detailed information about the CBE30 Communication Board in the

- *Supplementary SINAMICS System Components for SIMOTION* Manual
- *SIMOTION D4x5* Commissioning Manual
- *SIMOTION Communication* System Manual

6.5 Terminal module TM31

Features of the TM31

With the TM31 Terminal Module, the number of available digital inputs/digital outputs and the number of analog input/analog outputs within a drive system can be expanded. The TM31 is connected by means of DRIVE-CLiQ. It has two DRIVE-CLiQ interfaces for this purpose.

The TM31 contains the following terminals:

Table 6- 3 Interface overview of the TM31

Interface	Quantity
Digital inputs	8
Bidirectional inputs/outputs	4
Relay outputs with changeover contact	2
Analog inputs	2
Analog outputs	2
Temperature sensor input (KTY84-130 or PTC)	1

⚠ CAUTION
The 50 mm clearances above and below the components must be observed.

Additional references

You will find detailed information about the TM31 in the

- *Supplementary SINAMICS System Components for SIMOTION* Manual
- *SIMOTION D4x5* Commissioning Manual

6.6 Terminal module TM41

Features of the TM41

With the TM41 Terminal Module, the number of available digital inputs/digital outputs and the number of analog inputs within a drive system can be expanded. In addition, the TTL output can be used for encoder simulation. The TM41 is connected by means of DRIVE-CLiQ.

The TB41 contains the following terminals:

Table 6- 4 TM41 interface overview

Type	Quantity
Digital inputs	4
Digital inputs/digital outputs	4
Analog inputs	1
TTL encoder output	1

⚠ CAUTION
The 50 mm clearances above and below the component must be observed.

Additional references

You will find detailed information about the TM41 terminal module in the

- *Supplementary SINAMICS System Components for SIMOTION* Manual
- *SIMOTION D4x5* Commissioning Manual

6.7 Terminal Module TM54F

Features of the TM54F

The Terminal Module TM54F is a terminal expansion module for snapping on to a DIN EN 60715 mounting rail. The TM54F offers safe digital inputs and outputs for control of Safety Integrated functions of SINAMICS. The Terminal Module TM54F is supported by SIMOTION D4x5 from version V4.1 SP1 and higher.

Exactly one TM54F, which is connected via DRIVE-CLiQ, can be assigned to each drive control (SINAMICS Integrated of a D4x5, CX32, CU320, etc.). Each drive control must have its own dedicated TM54F.

Additional stations (e.g., TMxx, SMxx, MMxx) can be connected to the same DRIVE-CLiQ line.

TM54 is equipped with the following terminals:

Table 6- 5 Overview of the TM54F interfaces

Type	Quantity
Fail-safe digital outputs (F-DO)	4
Fail-safe digital inputs (F-DI)	10
Sensor [1] power supplies, dynamic response supported [2]	2
Sensor[1] power supplies, no dynamic response	1
Digital inputs for testing the F-DO with test stop	4

[1] Sensors: Fail-safe devices for commanding and detecting, such as emergency stop pushbuttons and safety locks as well as position switches and light arrays / light curtains.

[2] Dynamic response: The sensor power supply is switched on and off during test stop for testing the sensors, the cable routing, and the evaluation electronics of TM54F.

The TM54F provides 4 fail-safe digital outputs and 10 fail-safe digital inputs. A fail-safe digital output consists of a P/M-switching output as well as a digital input for reading back the switching state. A fail-safe digital input is made up of two digital inputs.

⚠ CAUTION
The 50 mm clearances above and below the component must be observed.

Additional references

You will find detailed information about the TM54F terminal module in the manual

- *Supplementary SINAMICS System Components for SIMOTION* Manual
- SINAMICS S120 Safety Integrated Function Manual

6.8 Terminal modules TM15 and TM17 High Feature

Features of TM15 and TM17 High Feature

The TM15 and TM17 High Feature Terminal Modules are used to implement inputs of measuring inputs and outputs of output cams for SIMOTION D. In addition, these terminal modules provide drive-related digital inputs and digital outputs with short signal delay times. TM15 and TM17 High Feature are connected by means of DRIVE-CLiQ.

TM15

Each of the 24 electrically isolated DI/DO can be parameterized channel-by-channel as a digital input (DI), digital output (DO), input of a measuring input, or output of an output cam.

TM17 High Feature

Each of the 16 DI/DO can be parameterized channel-by-channel as a digital input (DI), digital output (DO), input of a measuring input, or output of an output cam.

TM17 High Feature has fewer I/O channels than TM15, but more functionality. TM17 High Feature is distinguished by especially high resolution and accuracy as well as a parameterizable input filter and enabling inputs (max. 6 units). Parameterized enable inputs can enable measuring inputs or outputs of output cams (gate function). Due to their high accuracy, the DI/DO channels of the TM17 High Feature are non-isolated.

Note

⚠ CAUTION
The 50 mm clearances above and below the components must be observed.

Additional references

You will find further information on TM15 and TM17 High Feature in the

- *Supplementary SINAMICS System Components for SIMOTION* Manual
- *Terminal Modules TM15 and TM17 High Feature* Commissioning Manual

6.9 CUA31/CUA32 control unit adapter

Features of the CUA31/CUA32

You can connect a blocksize power module to the DRIVE-CLiQ interface using the CUA31 adapter module. The CUA32 adapter module also provides an encoder interface for an HTL, TTL or SSI encoder.

Table 6- 6 Overview of the interfaces for the adapter modules

Interface	CUA31	CUA32
DRIVE-CLiQ interface	3	3
EP terminals/temperature sensor connection	1	1
Power Module Interface (PM-IF)	1	1
Encoder interface (HTL, TTL, SSI) Only SSI encoders without incremental tracks may be operated.	0	1
Maximum DRIVE-CLiQ cable length	50 m	100 m

⚠ CAUTION
The 50 mm clearances above and below the components must be observed. The ventilation openings may not be covered by connecting cables.

Additional references

You will find more information on the CUA31/CUA32 control unit adapter in the *SINAMICS S120 AC Drive* Manual.

6.10 DMC20 DRIVE-CLiQ hub

Features

The DRIVE-CLiQ hub module 20 (DMC20) is used for the star-shaped distribution of a DRIVE-CLiQ line. With the DMC20, an axis grouping can be expanded with four DRIVE-CLiQ sockets for additional subgroups.

The module is especially suitable for applications which require DRIVE-CLiQ nodes to be removed in groups, without interrupting the DRIVE-CLiQ line and therefore the data exchange.

⚠ CAUTION
The 50 mm clearances above and below the component must be observed.

Additional references

You will find detailed information about the DMC20 in the *SINAMICS S120 Control Units and Additional Components* Manual.

6.11 Controller Extension CX32

Features of the CX32 (Controller Extension)

The CX32 is a module in SINAMICS S120 booksize format and supports scaling of the drive-end computing performance of the SIMOTION D435 and D445 Control Units.

Each CX32 can control up to 6 additional servo, 4 vector or 8 V/*f* axes.

Quantity structures

If one or more CX32 modules are used on a SIMOTION D435 or D445, the number of usable drives on SINAMICS Integrated is reduced by "one". This gives the following quantified volumes:

SIMOTION V4.1SINAMICS V2.5

Table 6- 7 SIMOTION V4.1/SINAMICS V2.5 quantified volume

	SINAMICS Integrated	1. CX32	2. CX32	3. CX32	4. CX32
SERVO D435	5+1 (5 drives+1 ALM [1])	6+1	6+1	-----	-----
SERVO D445	5+1	6+1	6+1	6+1	6+1
VEKTOR D435	3+1	4+1	4+1	-----	-----
VEKTOR D445	3+1	4+1	4+1	4+1	4+1

[1] ALM = Active Line Module

SIMOTION V4.0 HF2/ SINAMICS V2.4

Table 6- 8 SIMOTION V4.0 HF2/ SINAMICS V2.4 quantified volume

	SINAMICS Integrated	1. CX32	2. CX32	3. CX32	4. CX32
SERVO D435	5+1 (5 drives+1 ALM [1])	6+0	6+0	-----	------
SERVO D445	5+1	6+0	6+0	6+0	-----
VEKTOR D435	3+1	4+0	4+0	-----	-----
VEKTOR D445	3+1	4+0	4+0	4+0	-----

[1] ALM = Active Line Module

The CX32 has the following interfaces:

- 4 DRIVE-CLiQ (X100 – X103)
- 4 digital inputs and 4 digital inputs/digital outputs (X122)
- Power supply (X124)

⚠ CAUTION
The cooling clearances of 80 mm above and below the components must be observed.

Additional references

You will find detailed information about the CX32 in the

- *Supplementary SINAMICS System Components for SIMOTION* Manual
- *SIMOTION D4x5* Commissioning Manual

6.12 Available spare parts and accessories

Table 6- 9 Spare parts and accessories

Parts for SIMOTION D4x5	Order number	Accessories	Spare parts
Compact Flash card (CF card) 1 GB With drive software and SIMOTION Kernel	6AU1 400-2PA00-0AA0	x	
PROFIBUS RS485 bus connector with angular cable outlet (35°) with screw-type terminals, max. transmission rate 12 Mbit/s			
- without PG/PC interface	6ES7972-0BA41-0X40	x	x
- with PG/PC interface	6ES7972-0BB41-0X40	x	x
PROFIBUS Fast Connect RS485 bus connector with angular cable outlet (35°) With insulation displacement terminals, max. transmission rate 12 Mbit/s			
- without PG/PC interface	6ES7972-0BA60-0XA0	x	x
- with PG/PC interface	6ES7972-0BB60-0XA0	x	x
Fan/battery module incl. battery (optional for D425 / D435; required for D445) With SIMOTION D445, the fan/battery module is part of the scope of supply of the product.	6FC5 348-0AA01-0AA0	x	x
3 V lithium battery for fan/battery module	6FC5 247-0AA18-0AA0		x
Spacers for D425 and D435 Kit, 2 units	6SL3 064-1BB00-0AA0		x
Terminals for digital inputs/digital outputs (X122 and X132)	6SL3 064-2AB00-0AA0		x
Power supply connector (X124)	6SL3 065-2AA00-0AA0		x
Option slot protective cover	6SL3 064-3CB00-0AA0		x
Blanking plate	6SL3 064-3BB00-0AA0		x

To obtain ordering data information for other SINAMICS drive components, such as Line Modules, Motor Modules, DRIVE-CLiQ cables, etc., refer to the PM 21 Catalog.

Spares On Web

Spares On Web is an information system that enables you to find out which spare parts are available for your device.

http://workplace.automation.siemens.de/sparesonweb

Standards and approvals

A

A.1 General rules

IEC 1131

The SIMOTION programmable controller meets the requirements and criteria of the Standard IEC 1131, Section 2.

CE marking

Our products meet the general and safety-related requirements of the following EC guidelines and conform to the uniform standards (EN) for programmable controllers published in the official gazettes of the European Union:

89/336/EEC "Electromagnetic Compatibility" (EMC guideline)

The EC declaration of conformity is contained in this manual.

EMC Directive

SIMOTION products are designed for industrial use.

Table A- 1 EMC Directive

Field of application	Requirements for	
	Emitted interference	Immunity to noise
Industry	EN 50081-2	EN 61000-6-2

UL certification

Recognized component mark for United States and the Canada Underwriters Laboratories (UL) according to Standard UL 508, File 16 4110.

Declaration of conformity

The current Declaration of Conformity is on the Internet at

http://support.automation.siemens.com/WW/view/de/15257461

A.2 Safety of electronic controllers

Introduction

The following remarks relate to fundamental criteria and apply irrespective of the type of controller and the manufacturer.

Reliability

Comprehensive and cost-effective measures have been taken during development and production to increase the reliability of the devices and components as far as possible.

These include

- The selection of high-quality components
- Worst-case dimensioning of all circuits
- Systematic and computerized inspection of all supplied components
- Burning in of all LSI circuits (e.g. processors, memories, etc.)
- Measures to prevent static discharge when handling MOS circuits
- Visual checks during various stages of manufacture
- Continuous heat testing at higher ambient temperatures for several days
- Computerized final inspection
- Statistical analysis of all returned goods so that corrective measures can be initiated immediately
- Monitoring of the primary controller components using online tests

These measures are considered to be basic measures for safety engineering. They avoid or control the majority of faults that may occur.

Risk

A higher degree of safety standard applies to all applications and situations where there is a risk of material damage or injury to persons if there is a failure. Special regulations specific to the system apply to such applications. These must be taken into account for configuration of the controller (e.g. VDE 0116 for furnaces).

For electronic controllers with safety responsibility, the measures required for preventing or controlling faults depend on the hazard inherent in the plant. In this respect, the basic measures listed above are no longer adequate once the hazard exceeds a certain potential. Additional measures (e.g. double redundancy, tests, checksums, etc.) for the controller must implemented and certified (DIN VDE 0801).

Division into safety-critical and non-safety-critical areas

Nearly all systems contain parts that perform safety-related tasks (e.g. emergency stop switch, protective grating, two-hand controls). To avoid having to apply safety-related criteria to the entire controller, it is customary to divide the controller into two areas - one that is **critical to safety** and one that is **not critical to safety**. No special demands are made concerning safety in the area that is not safety-critical as an electronic fault would not have any effect on the safety of the system. However, in the safety-critical area, only controllers and circuits that comply with the relevant regulations, may be used.

Important note

Even if an extremely high level of conceptual safety has been achieved in the design of an electronic controller - e.g. through implementation of a multi-channel design - strict adherence to all instructions in the operator's guide is mandatory, as incorrect handling could invalidate measures taken to prevent hazardous faults or create additional potential hazards.

⚠ DANGER

Electrical, magnetic and electromagnetic fields (EMF) that occur during operation can pose a danger to persons who are present in the direct vicinity of the product - especially persons with pacemakers, implants, or similar devices.

The relevant directives and standards must be observed by the machine/plant operators and persons present in the vicinity of the product. These are, for example, EMF Directive 2004/40/EEC and standards EN 12198-1 and -3 pertinent to the European Economic Area (EEA), as well as accident prevention code BGV 11 and the associated rule BGR 11 "Electromagnetic fields" of the German employer's liability accident insurance association.

These state that a hazard analysis must be drawn up for every workplace, from which measures for reducing dangers and their impact on persons are derived and applied, and exposure and danger zones are defined and observed.

The safety information in the Storage, Transport, Installation, Commissioning, Operation, Maintenance, Disassembly and Disposal sections must also be taken into account.

A.3 Electromagnetic compatibility

Definition

Electromagnetic compatibility is the capability of an electrical apparatus to function satisfactorily in its electromagnetic environment without affecting this environment.

The control unit complies with the requirements of the EC directive on EMC and the EMC law 89/339/EEC.

Relevant standards for the electromagnetic compatibility (EMC)

The following standards for EMC must be satisfied in order to comply with the EMC installation guideline (Order No. 6FC5297-□AD30-0AP□):

Table A- 2 EMC standards

Subject matter	Standard
Product standard	DIN EN 61800-3
Emitted Interference	DIN EN 61000-6-4
Immunity to noise	DIN EN 61000-6-2

ESD guidelines

B

B.1 ESD definition

What does ESD mean?

All electronic modules are equipped with highly integrated modules or components. Because of the technology used, these electronic components are very sensitive to overvoltages and thus to discharge of static electricity.

The acronym **ESD** has become the established designation for such **E**lectrostatic **S**ensitive **D**evices. The **ESD** designation is used internationally to refer to **e**lectrostatic **s**ensitive **d**evices.

Electrostatic sensitive devices are identified by the following symbol:

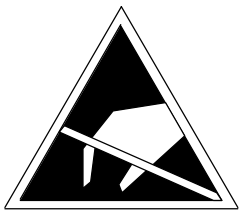

Figure B-1 Symbol for identification of electrostatic sensitive devices

⚠ CAUTION
Electrostatic sensitive devices can be irreparably damaged by voltages that are far lower than anything a person can perceive. These voltages occur if you touch a component or the electrical connection of a module without having previously discharged any static from your body. Any damage that occurs to a module as a result of overvoltage is generally not recognized immediately and only comes to light after the equipment has been operating for some time.

B.2 Electrostatic charging of individuals

Any person who is not conductively connected to the electrical potential of the environment can accumulate an electrostatic charge.

This figure indicates the maximum electrostatic charges that can accumulate on an operator when he comes into contact with the indicated materials. These values comply with the specifications in IEC 801-2.

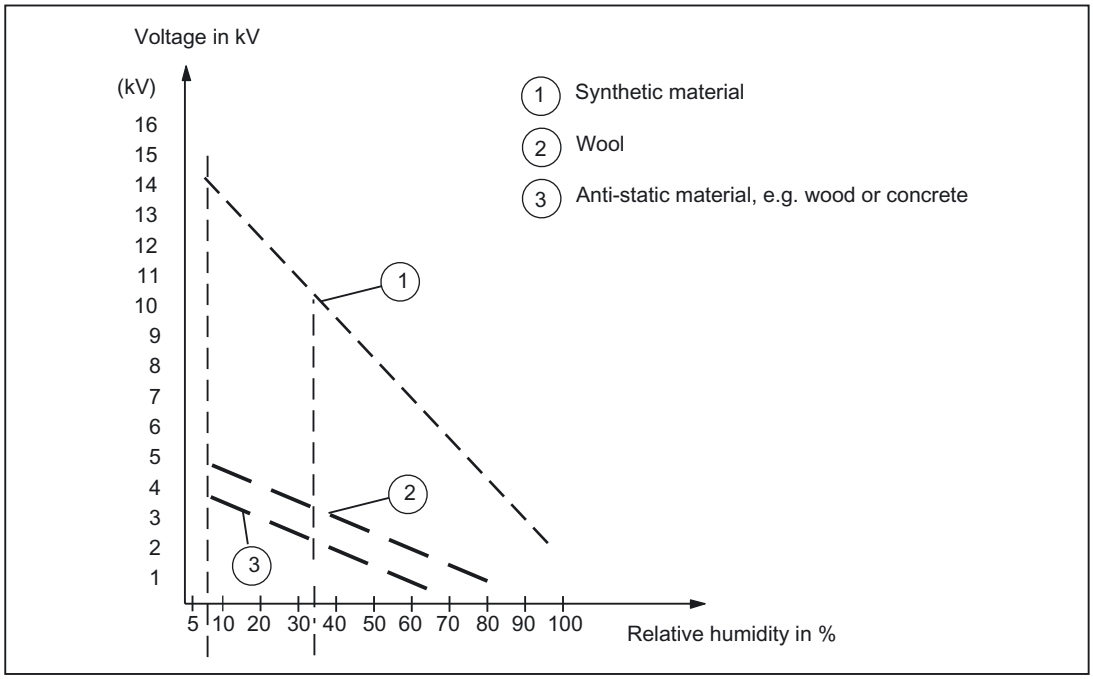

Figure B-2 Electrostatic voltage that can accumulate on operating personnel

B.3 Basic measures for protection against discharge of static electricity

Ensure sufficient grounding

When working with electrostatic sensitive devices, make sure that the you, your workstation, and the packaging are properly grounded. This prevents the accumulation of static electricity.

Avoid direct contact

You should only touch ESD components if unavoidable (for example, during maintenance work). When you touch modules, make sure that you do not touch either the pins on the modules or the printed conductors. If you follow these instructions, electrostatic discharge cannot reach or damage sensitive components.

If you have to take measurements on a module, make sure that you first discharge any static that may have accumulated in your body. To do this, touch a grounded metal object. Only use grounded measuring instruments.

Appendix 7

7.1 List of abbreviations

Table 7- 1 Abbreviations

Abbreviation	Description
ASIC	Application Specific Integrated Circuit
OS	Operating state
CF card	CompactFlash Card
CUA	Control Unit Adapter
DAC	Digital-to-analog converter
DESINA	Decentralized and standardized installation technology for machine tools and manufacturing systems
DI	Digital Input
DIP	Dual In Line Package
DO	Digital Output
DP	Distributed I/O
DRIVE-CLiQ	DRIVE Component Link with IQ
DSC	Dynamic Servo Control (DSC) enables the actual position value to be evaluated in a fast speed controller cycle directly in the drive.
ECOFAST	Energy and Communication Field Installation System
ESD	Electrostatically Sensitive Devices
EMC	Electromagnetic Compatibility
EP	Enable Pulses
ES	Engineering System
FW	Firmware
GSD	Device master data (device parameter list for integration in HW config)
HTL	High Threshold-Logic
HW	Hardware
IM	Interface module
I/O	Input/Output
IRT	Isochronous Real Time Ethernet
KTY	Special temperature sensor
LED	Light Emitting Diode
OLP	Optical Link Plug
PB	PROFIBUS
PELV	Protective Extra Low Voltage
PG/PC	Programming Device / Personal Computer
PN	PROFINET
PROFIBUS DP	Process Field Bus - Decentral Periphery

Abbreviation	Description
PS	Power Supply
PTC	Positive Temperature Coefficient
PZD	Process status data
RT	Real Time Ethernet (non-isochronous PROFINET)
SBC	Safe Brake Control
SCOUT	SIMOTION Controlling with Optimized Usability Toolbox (Engineering system in the SIMOTION product family)
SITOP	Power supply
SM	Sensor module (SINAMICS)
SMC	Sensor Module Cabinet, encoder connection to DRIVE-CLiQ
SME	Sensor Module External, encoder connection to DRIVE-CLiQ (with high safety class)
SMx	Sensor Module (overview for various sensor modules, e.g. SMI (integrated sensor module) or SME (external sensor module))
SS1	Safe Stop 1
STO	Safe Torque Off
SW	Software
TCP/IP	Transmission Control Protocol / Internet Protocol
TIA	Totally Integrated Automation
TM	Terminal Module for DRIVE-CLiQ
TO	Technology object
TP	Technology package
TTL	Transistor Transistor Logic

Index

A

Abbreviations, 82
Accessories list, 74
Axis grouping, 11
    DRIVE-CLiQ components, 12
    SIMOTION D, 11
    SINAMICS infeed, 11
    SINAMICS power unit, 12

C

CE
    Identifier, 75
Communication Board
    CBE30, 65
CompactFlash card, 24
CompactFlash Card Slot, 47
CX32
    Controller Extension, 72

D

D425
    Device image, 18
D435
    Device image, 18
D445
    Device image, 19
Declaration of conformity, 75
Digital inputs
    Isolated, 42
Digital inputs/digital outputs
    bidirectional, 43
    Schematic representation, 40
    Use, 42
Dimension drawings
    D425 and D435, 57
    D445, 58
Distributed I/O systems, 13
DMC20
    DRIVE-CLiQ Hub Module, 71
DRIVE-CLiQ
    Advantages, 15
    Components, 16
DRIVE-CLiQ interface, 34
    DRIVE-CLiQ, 34

E

EMC guidelines, 75
ESD guideline, 79

F

Fan/battery module
    Battery replacement, 63
    Installation, 62

G

Guideline
    ESD, 79

I

I/O systems
    PROFIBUS, 13
    Released, 16
I/O systems. PROFINET, 15
IEC 1131, 75
Interfaces
    CompactFlash Card Slot, 47
    Digital inputs/digital outputs, 39
    Ethernet, 36
    Measuring sockets, 48
    Overview, 33
    Power supply, 44
    PROFIBUS, 45

L

LED displays, 31
Licenses, 26
    Pre-installed, 25

M

MAC addresses, 21
Mode selector switch, 29
    Positions, 28

P

Power supply, 55
Power supply interface
    Assignment, 44
PROFIBUS DP interface
    Assignment, 45

R

Real-time clock, 54
References, 4
RESET button, 30

S

Safety information, 22
Safety of electronic controllers, 76
Service selector switch
    Positions, 30
SIMOTION D4x5
    Hardware components, 11
    Possible applications, 10
    Software components, 12
    System overview, 9
    Variants, 10
Spare parts list, 74
System components, 13

T

Technical data
    D4x5, 49
    Power supply, 55
    Real-time clock, 54
Terminal Board
    TB30, 64
Terminal Module
    TM15 and TM17 High Feature, 69
    TM31, 66
    TM41, 67
Totally Integrated Automation, 9
Type plate, 20
    CF card, 25
    D4x5, 20

U

UL certification, 75