A fully adaptive system for the vibration suppression in the broad frequency range using a single piezoelectric actuator shunted by a negative capacitor

Miloš Kodejška*, Václav Linhart*, Jan Václavík*, and Pavel Mokrý*
* Faculty of Mechatronics, Informatics and Interdisciplinary Studies, Technical University of Liberec, CZ-46117 Liberec, Czech Republic

***Abstract*—A fully adaptive system for the suppression of vibration transmission using a single piezoelectric actuator shunted by a negative capacitor circuit is presented. It is known that using the negative capacitor shunt, the spring constant of the piezoelectric actuator can be controlled to extreme values zero or infinity. Since the value of spring constant controls the force transmitted through an elastic element, it is possible to achieve a reduction of the transmissibility of vibrations through the piezoelectric actuator by reducing its effective spring constant. The narrow frequency range and broad frequency range vibration isolation systems are analyzed, modeled, and experimentally investigated. The problem of high sensitivity of the vibration control system is resolved by applying the adaptive control to the circuit parameters of the negative capacitor. An adaptive system, which can achieve the self-adjustment of the negative capacitor parameters by analyzing a realistic vibration signal that consists of a noise and a dominant harmonic component, is presented. It is shown that such an arrangement allows the realization of a simple system, which, however, offers a great vibration isolation efficiency in variable vibration conditions.**

***Index Terms*—Piezoelectric actuator, Vibration transmission suppression, Piezoelectric shunt damping Negative capacitor, Elastic stiffness control, Adaptive device**

I. Introduction

TODAY, the suppression of vibration transmission has become recognized as an important problem in many industrial fields. In the fabrication process, the vibrations have a deteriorating effect on the precision and the life-time of mechanical components and machining instruments. In the automotive industry, every car component is a subject of a careful vibration analysis in certain development stages. The car chassis represents of unwanted structure-born noise due to the vibrations that are transmitted from the engine, gearing box and the car axles. The actual frequency spectra of vibrations are controlled by the car velocity, engine revolutions per minute and many other unknown variable parameters. The aforementioned example indicates the necessity of a research and development of adaptive noise and vibration control systems that can perform in variable working conditions.

On the other hand, efficient and inexpensive methods for the noise and vibration control remain unavailable despite their practical importance. Current passive methods are inefficient at low-frequencies and conventional active methods are costly. In this article, there is presented the development of the vibration control method, which is based on the suppression of the vibration transmission through the piezoelectric bulk actuator. The vibration suppression effect is achieved: first, by inserting the piezoelectric actuator between the vibrating structure and the object that should be isolated from the vibrations, and, second, by connecting the piezoelectric actuator to the active external shunt circuit that controls its mechanical response to the incident vibrations. It was shown by Date et al. [1] that the effect of the shunt circuit on the mechanical response of the piezoelectric actuator can be explained through the change of the effective elastic properties of the piezoelectric actuator. Since the resonant frequency of the system depends on the spring constant of the piezoelectric actuator and the mass of the object, the reduction of the spring constant of the piezoelectric element results in the reduction of the resonant frequency and the transmissibility of vibrations at super-resonant frequencies. Therefore, the vibration suppression affect is in principle the same as it is in the passive methods. It can be, however, achieved at low frequencies.

The aforementioned method to reduce the vibration transmission is called the Piezoelectric Shunt Damping (PSD) and it is based on the change of the elastic properties of the piezoelectric actuator connected to passive or active electric network [2]. Early applications of the PSD method have been realized using very thin spherically or cylindrically curved piezoelectric polymer membranes shunted by negative capacitor circuits and reported by Okubo et al. [3] and Kodama et al. [4]. Recently, Imoto at al. [5] and Tahara et al. [6] demonstrated the great potential of this method on a system for suppressing vibrations by 20 dB. The advantages of the PSD method stem from (i) the simplicity of the noise control system, which consists of a self-sensing piezoelectric actuator connected to an active shunt circuit, (ii) the realization of the active shunt circuit electronics using a simple analog circuit with a single linear power amplifier, which makes it possible to greatly reduce the electric power consumption, and (iii) the broad frequency range (e.g. from 10 Hz to 100 kHz) where the system can effectively suppress vibrations, which is allowed by the use of analog electronics.

Despite the clear aforementioned advantages of the PSD

Email: pavel.mokry@tul.cz

method, there still exist some important drawbacks and open or unresolved questions that prevent the active PSD method from industrial exploitation: (i) the critical issue limiting the applicability of the method is the high sensitivity and low stability of real systems that prevent their use in changing operational conditions. It was actually shown by Sluka et al. [7] that the optimal working point of the PDS system is just on the edge of the stability region of the device. Later, the comparison of the stability of several PSD method implementations has been analyzed in the work by Preumont et al. [8]. (ii) The adaptive PSD vibration control systems that were reported in Refs. [7], [9], [10], [11] could achieve the low values of the transmissibility of vibrations only in a narrow frequency range and the used adaptive algorithms limited the applicability of the systems to the suppression of pure harmonic vibrations only.

The aforementioned issues have motivated the work presented below, where we will address the design of adaptive broad-band vibration control device. The principle of the PSD vibration control device will be presented in Sec. II. In Sec. III, we will illustrate the aspects of narrow and broad frequency range vibration isolation. Design of the adaptive broad-band vibration isolation device will be presented in Sec. IV. Conclusions of our experiments will be presented in Sec. V.

II. Principle of the vibration suppression

It is known that the vibration transmission through the interface between two solid objects is mainly controlled by the ratio of their mechanical impedance. Since the mechanical impedance is proportional to the material stiffness, extremely soft element placed between two other objects works as an interface with high transmission loss of vibrations. In the following Subsection, we develop a simple theoretical model that easily explains the effect of the elasticity in a mechanical system on the transmission of vibrations through the system. Later, we present a method to control the elastic properties of the piezoelectric actuator using a shunt electric circuits that can be profitably used in the vibration isolation system.

A. Role of the spring constant on the transmissibility of vibrations

Scheme of the vibration isolation system is shown in Figure 1a). The vibration damping element with a spring constant K and a damping coefficient B are placed between the shaker and the object of a mass M that should be isolated from vibrations. The incident vibrations of a displacement amplitude u_1 and the transmitted vibrations of a displacement amplitude u_2 are measured using accelerometers. The transmissibility of vibrations TR through the considered vibration isolation system is defined as a ratio of the transmitted displacement amplitude u_2 over the incident displacement amplitude u_1 at the reference source point:

$$TR = |u_2/u_1| \tag{1}$$

The transmissibility of vibration is controlled by the material parameters that control the dynamic response of the

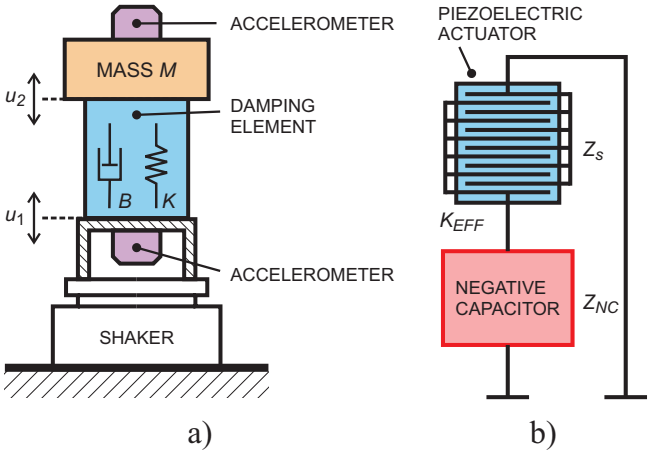

Fig. 1. Scheme of the vibration isolation system. The vibration damping element with a spring constant K and a damping coefficient B are placed between the shaker and a mass M that should be isolated from vibrations. The incident vibrations of a displacement amplitude u_1 and the transmitted vibrations of a displacement amplitude u_2 are measured using accelerometers (a). The vibration damping element used in this work is the piezoelectric actuator of the impedance Z_S shunted by a negative capacitor of the impedance Z_{NC}. (b)

mechanical system. The dynamic response of the system is governed by following equation of motion:

$$M\frac{d^2u_2}{dt^2} + B\frac{du_2}{dt} + Ku_2 = B\frac{du_1}{dt} + Ku_1. \tag{2}$$

Considering the simplest case of the transmission of harmonic vibrations of an angular frequency ω, the solution of Eq. (2) yields the formula:

$$TR = \omega_0\sqrt{\frac{\omega^2 + Q^2\omega_0^2}{\omega^2\omega_0^2 + Q^2\left(\omega_0^2 - \omega^2\right)^2}}, \tag{3}$$

where the symbols Q and ω_0 stand for the mechanical quality factor $Q = \sqrt{KM}/B$ and the resonance frequency $\omega_0 = \sqrt{K/M}$. It is seen that the smaller the value of spring constant K, the smaller the value of the resonant frequency ω_0 , and the smaller the value of transmissibility TR of harmonic vibrations of angular frequency $\omega > \omega_0$.

B. Method of the active elasticity control of piezoelectric actuators

Figure 1b) shows the vibration damping element used in this work, which is the piezoelectric actuator of the capacitance C_S shunted by a negative capacitor of the capacitance C. This system is an example of so called Active Elasticity Control method discovered in 2000 by Date et al. [1]. The effective spring constant of the piezoelectric actuator K_{eff} can be derived from the equations of state of the piezoelectric actuator for the charge Q and the change of the piezoelectric actuator length $\Delta l = u_2 - u_1$:

$$Q = dF + C_S V, \tag{4}$$

$$\Delta l = (1/K_S)F + dV, \tag{5}$$

which are appended by the formula for the voltage V applied back to the piezoelectric actuator from the shunt circuit of

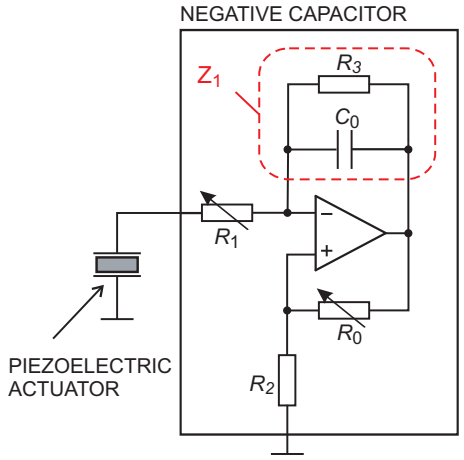

Fig. 2. Electrical scheme of the piezoelectric actuator shunted by a negative capacitor. The negative capacitor is realized using a simple circuit with an operational amplifier in a feedback loop. Using variable resistors R_0 and R_1 , it is possible to adjust the real and imaginary part of its capacitance, so that it matches the capacitance of the piezoelectric actuator (except the sign).

capacitance C:

$$V = -Q/C, \tag{6}$$

where symbols d, C_S, and K_S stand for the piezoelectric coefficient, the capacitance, and the spring constant of a mechanically free piezoelectric element, respectively.

Combining Eqs. (4), (5), and (6) and with the use of the relationship between the capacitance and impedance of a capacitor, $Z = 1/(j\omega C)$, one can readily obtain the formula for the effective spring constant of the piezoelectric element connected to the external capacitor V:

$$K_{\text{eff}} = K_S \left(\frac{1 + Z_S/S}{1 - k^2 + Z_S/S} \right), \tag{7}$$

where $k^2 = d^2 K_S/C_S$ is the electromechanical coupling factor of the piezoelectric element $(0 < k < 1)$. It can be concluded from the above formula that the small values of the effective spring constant K_{eff} of the piezoelectric element can be achieved, when the capacitance of the external circuit is negative.

It follows from Eq. (7) that, when the complex impedance of the shunt circuit Z approaches the value of $-Z_S$, the effective spring constant K_{eff} of the piezoelectric element reaches the zero value. Figure 2 shows the electrical scheme of the piezoelectric actuator shunted by the active circuit that effectively works as with negative capacitance. It will be further referenced as negative capacitor. Effective impedance of the negative capacitor shown in Figure 2 is equal to

$$Z(\omega) = R_1 + \frac{R_0 + R_2 + A_u(\omega) R_2}{R_0 + R_2 - A_u(\omega) R_0} Z_1(\omega) \approx R_1 - \frac{R_2}{R_2} Z_1(\omega), \tag{8}$$

where A_u is the output voltage gain of the operational amplifier and

$$Z_1(\omega) = \frac{R_3}{1 + j\omega C_0 R_3} = \frac{R_3 - j\omega C_0 R_3^2}{1 + \omega^2 C_0^2 R_3^2} \tag{9}$$

is the impedance of the reference capacitance of the negative capacitor. The approximate formula on the right-hand side of Eq. (8) stands for the ideal operational amplifier, i.e. A_u tends to infinity. The impedance of the piezoelectric actuator is equal to

$$Z_S(\omega) = \frac{1}{j\omega C'_S (1 - j \tan\delta_S)} = \frac{\tan\delta_S - j}{\omega C_S (1 + \tan^2\delta_S)}, \tag{10}$$

where the both C'_S and $\tan\delta_S$ practically do not depend on frequency. It is convenient to approximate the frequency dependence of the piezoelectric impedance actuator by frequency dependence of the in-series connection of the capacitor and resistor of capacitance C_S and resistance R_S, respectively.

$$Z_S(\omega) \approx R_S + \frac{1}{j\omega C_S}. \tag{11}$$

At given critical frequency ω_0, it possible to adjust the negative capacitor in such a way that:

$$|Z|(\omega_0) = |Z_S|(\omega_0) \tag{12}$$

$$arg(Z(\omega_0)) = -arg(Z_S(\omega_0)) \tag{13}$$

Such a situation is characterized by the relation $Z_S(\omega_0)/Z(\omega_0) = -1$ and, according to Eq. (7), it yields K_{eff} is reaching effectively zero value and the transmission of vibrations reaches minimal values.

III. Experimental Study of the Vibration Suppression

It follows from Eqs. (12) and (13) that the vibration isolation effect of the shunted piezoelectric actuator can be achieved, when the both the amplitudes and phase angles (except the sign) of the negative capacitor and the piezoelectric actuator capacitances are equal. It follows from Eqs. (8) to (10) that for a particular adjustment of the negative capacitor shown in Figure 2 the fulfillment of Eq. (11) can be achieved only in a narrow frequency range. In the next subsection, we will present and discuss the experimental data measured on our vibration isolation device.

A. Narrow frequency range vibration suppression

The negative capacitor was realized using LF 356N operational amplifier. Its output voltage gain was approximated by the function $A_u(\omega_0) = A_0/(1 + j\omega/(2\pi f_1))$, where A_0 = 105 dB and f_1 = 100 Hz. Considering the negative capacitor shown in Figure 2, the condition given by Eq. (12) is achieved by setting the values of resistances R_1 and R_0 according to following formulae:

$$R_0 = \frac{\omega_0^2 C_0 C_S R_2 R_3^2}{1 + \omega^2 C_0^2 R_3^2}, \tag{14}$$

$$R_1 = \frac{1}{\omega^2 C_0 C_S R_3} - R_S \tag{15}$$

In order to find the proper adjustment of the negative capacitor, the frequency dependences of the electric impedance amplitude and phase of the piezoelectric actuator were measured using HP 4195A network/spectrum analyzer and shown in Figures 3a) and b). Using the least-square method, the values R_S and C_S of the equivalent circuit of the piezoelectric actuator have been identified as R_S = 1.150 Ω and C_S = 6.602

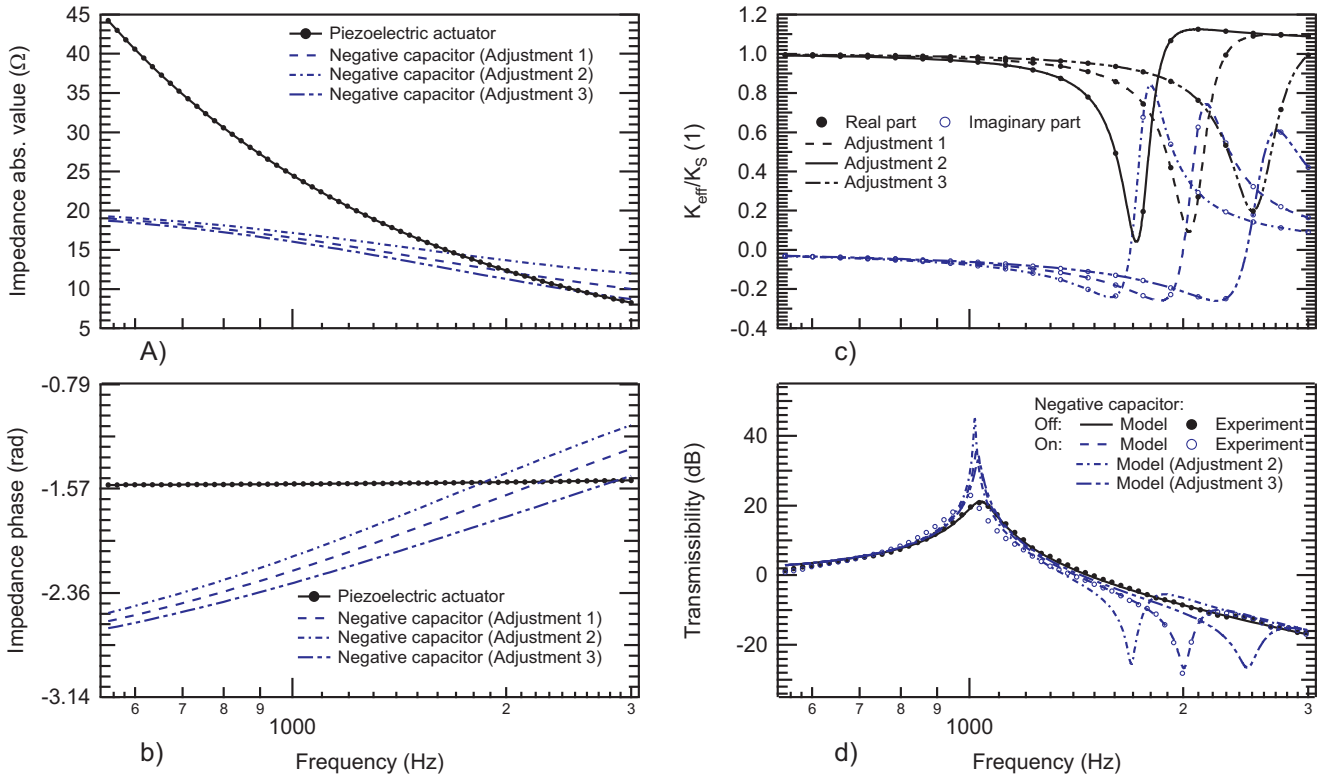

Fig. 3. Frequency dependences of the physical quantities that controls the value of transmissibility of vibrations through the piezoelectric actuator shunted by the negative capacitor shown in Figure 2: a) electric impedance absolute value of the piezoelectric actuator (measured) and the negative capacitor for three different adjustments of resistors R_0 and R_1 (calculated); b) electric impedance phase of the piezoelectric actuator (measured) and the minus electric impedance phase of the negative capacitor (calculated), c) calculated real and imaginary parts of the effective spring constant of the piezoelectric actuator shunted by the negative capacitor. Part d) shows the comparison of the measured values of the transmissibility of vibrations through the electrically free piezoelectric actuator (filled circles) and the pizoelectric actuator shunted by the negative capacitor adjusted at the frequency ω_0 = 2 kHz (empty circles). The measured values of the transmissibility of vibrations are compared with the calculated from the theoretical model.

μF. In the same way, the frequency dependence of the electric impedance amplitude and phase of the reference capacitance Z_1 of the negative capacitor were measured (Data not presented here.) By the same least-square fitting procedure, the values of R_3 = 27.84 Ω and C_0 = 4.686 μF. The obtained numerical values were cross-checked by a direct measurements on the ESCORT ELS-3133A LRC-meter at the frequency 1 kHz giving the values R_S = 0.87 Ω, C_S = 6.94 μF, R_3 = 24.5 Ω, and C_0 = 5.16 μF. The value of the resistance R_2 was measured to be equal to R_2 = 2.41 kΩ. The negative capacitor resistors R_0 and R_1 were pre-adjusted to values R_0 = 2.41 kΩ and R_1 = 6.93 Ω. Then the frequency dependence of the transmissibility of vibrations through the electrically free piezoelectric actuator, i.e. the actuator, which was disconnected from the negative capacitor, was measured in the frequency range from 550 Hz to 3 kHz and the result is indicated by filled circles in Figure 3. The measured values of the frequency dependence of the transmissibility of vibrations were compared with the theoretical formula given by Eq. (3) and the values of the spring stiffness K_S = 7.11 · 107 Nm^{-1}, mass M = 1.67 kg and the mechanical quality factor of the piezoelectric actuator Q = 11.3 were obtained using the method of least squares.

Then, the values of resistances R_0 and R_1 in the negative capacitor were finely tuned in order to achieve the maximum decrease in the transmissibility of vibration at the frequency of 2 kHz. Then the transmissibility of vibration through the piezoelectric actuator shunted by a negative capacitor was measures and the result is indicated by empty circles in Figure 3. It can be seen that a 20 dB decrease in the transmissibility of vibration in a narrow frequency range around 2 kHz was achieved. The measured values of the frequency dependence of the transmissibility of vibrations were compared with the theoretical model given by Eqs. (3), (8), (9) and (11) and the values of k^2 = 0.064, R_0 = 2.43 k Ω, and R_1 = 6.86 Ω using the method of least squares. The fitted values of resistances R_0 and R_1 were cross-checked by the direct measurement using the LRC-meter giving the values of R_0 = 2.32 k Ω, and R_1 = 6.20 Ω, respectively.

The physics standing behind the decrease in the transmissibility vibration through the piezoelectric actuator shunted by the negative capacitor can be easily understood by looking at Figure 3. Figures 3 a) and b) show the comparison of the measured frequency dependence of the electric impedance absolute value and phase of the piezoelectric actuator with the calculated values of the frequency dependence electric

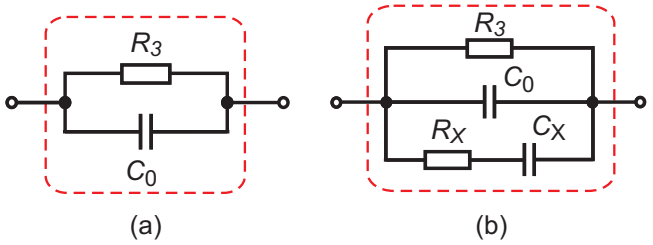

Fig. 4. Electrical scheme of the reference impedance Z_1 inside the negative capacitor (see B) for a narrow frequency range a) and a broad frequency range vibration isolation system.

impedance absolute value and phase of the negative capacitor for three different adjustments that differ in the critical frequency of the vibration suppression. The adjustment 1 is characterized by R_0 = 2.43 k Ω, R_1 = 6.86 Ω, and the critical frequency f_0 = 2 kHz, the adjustment 2 is characterized by R_0 = 2.19 k Ω, R_1 = 9.86 Ω, and the critical frequency f_0 = 1.7 kHz, and the adjustment 3 is characterized by R_0 = 2.69 k Ω, R_1 = 4.36 Ω, and the critical frequency f_0 = 2.46 kHz. In Figures 3 a) and b), it is seen that the frequency dependences of the both absolute values and phases of the piezoelectric actuator and the negative capacitor crosses at the same frequency for all three adjustments. Then the conditions given by Eqs. (12) are satisfied at the given critical frequency, which yields the decrease in the real part value of the effective spring constant K_{eff} of the piezoelectric actuator as it is seen in Figure 3 c).

On the other hand, Eqs. (12) are satisfied only in a narrow frequency range around the critical frequency. The reason for this unwanted effect is the essential mismatch between the electric impedance absolute value and phase frequency dependencies of the piezoelectric actuator and negative capacitor, which is clearly seen in Figure 3 a) and b). The next subsection discusses the problem of broadening the frequency range where the vibration isolation device can efficiently suppress the vibration transmission.

B. Broad frequency range vibration suppression

In order to broaden the frequency range of the efficiently suppressed transmission of vibrations, it is necessary to achieve a precise matching of the electrical impedance frequency dependencies of the piezoelectric actuator and the negative capacitor. Since the frequency dependence of the piezoelectric actuator are control by its material and its construction, it is necessary to modify the frequency dependence of the negative capacitor. The frequency dependence of the negative capacitor impedance is determined by the reference impedance Z_1 . The basic parallel connection of the capacitor C_0 and the resistor R_3 was replaced by a more complicated RC network shown in Figure 4.

The values of capacitances and resistances in the reference impedance Z_1 were adjusted in such a way that the difference between frequency dependencies of electric impedances of the piezoelectric actuator and the reference impedance were minimal in the frequency range from 0.5 kHz to 3 kHz. Again, the frequency dependence of the electric impedance amplitude and phase of the modified reference capacitance Z_1 of the negative capacitor were measured (Data not presented here.) By the same least-square fitting procedure, the values of R_3 = 15.09 kΩ, C_0 = 480 nF, R_X = 44.6 Ω, and C_X = 807 nF. The obtained numerical values were cross-checked by a direct measurements on the ESCORT ELS-3133A LRC-meter at the frequency 1 kHz giving the values R_3 = 15 kΩ, C_0 = 470 nF, R_X = 44 Ω, and C_X = 813 nF.

Then the values of resistances R_0 and R_1 in negative capacitor was finely tuned in order to achieve the maximum decrease in the transmissibility of vibration at the frequency 2 kHz. Then the transmissibility of vibration through the piezoelectric actuator shunted by a broad-frequency-range-optimized negative capacitor was measured and the result is indicated by empty triangles in Figure 5 d). It can be seen that a 20 dB decrease in the transmissibility of vibration was achieved in the broad frequency range from 1 kHz to 2 kHz. The measured values of the frequency dependence of the transmissibility of vibrations were compared with the theoretical model given by Eqs. (3), (8), (9) and (11) and the values of k^2 = 0.067, R_0 = 12.6 kΩ, and R_1 = 2.6 Ω using the method of least squares.

The reason for the broadening the frequency range can be seen in Figure 5. Figures 5 a) and b) show the comparison of the measured frequency dependence of the electric impedance absolute value and phase of the piezoelectric actuator with the calculated values of the frequency dependence electric impedance absolute value and phase of the negative capacitor with the narrow and broad frequency range reference capacitances Z_1 shown in Figures 4 a) and b). In Figures 5 a) and b), it is seen that the frequency dependences of the both absolute values and phases of the piezoelectric actuator and the negative capacitor reference capacitance are close to each other in the case broad frequency range.

IV. Adaptive System for the Vibration Isolation

In real situations, the incident vibrations usually consist of the sum of several randomly changing dominant harmonic components. These harmonic components appear in the system due to the eigen-frequencies of mechanical parts or due to vibration of revolving mechanical parts. In order to suppress the vibration transmission between the vibrating mechanical parts in real industrial application, first, the vibration isolation system should efficiently work in the broad frequency range and, second, the high sensitivity of the vibration isolation system to its proper adjustment in varying environmental conditions requires a mechanism for the control of the proper adjustment of the negative capacitor resistances R_0 and R_1 . Scheme the adaptive vibration isolation device is shown in Figure 6. The adaptive vibration isolation system consists of the piezoelectric actuator shunted by the negative capacitor, whose variable resistances R_0 and R_1 are electronically controlled by a personal computer (PC). In order to allow the electronic control of the negative capacitor, the variable resistances R_0 and R_1 , which were realized by trimmers trimmers, were replaced by a pair of opto-isolators.

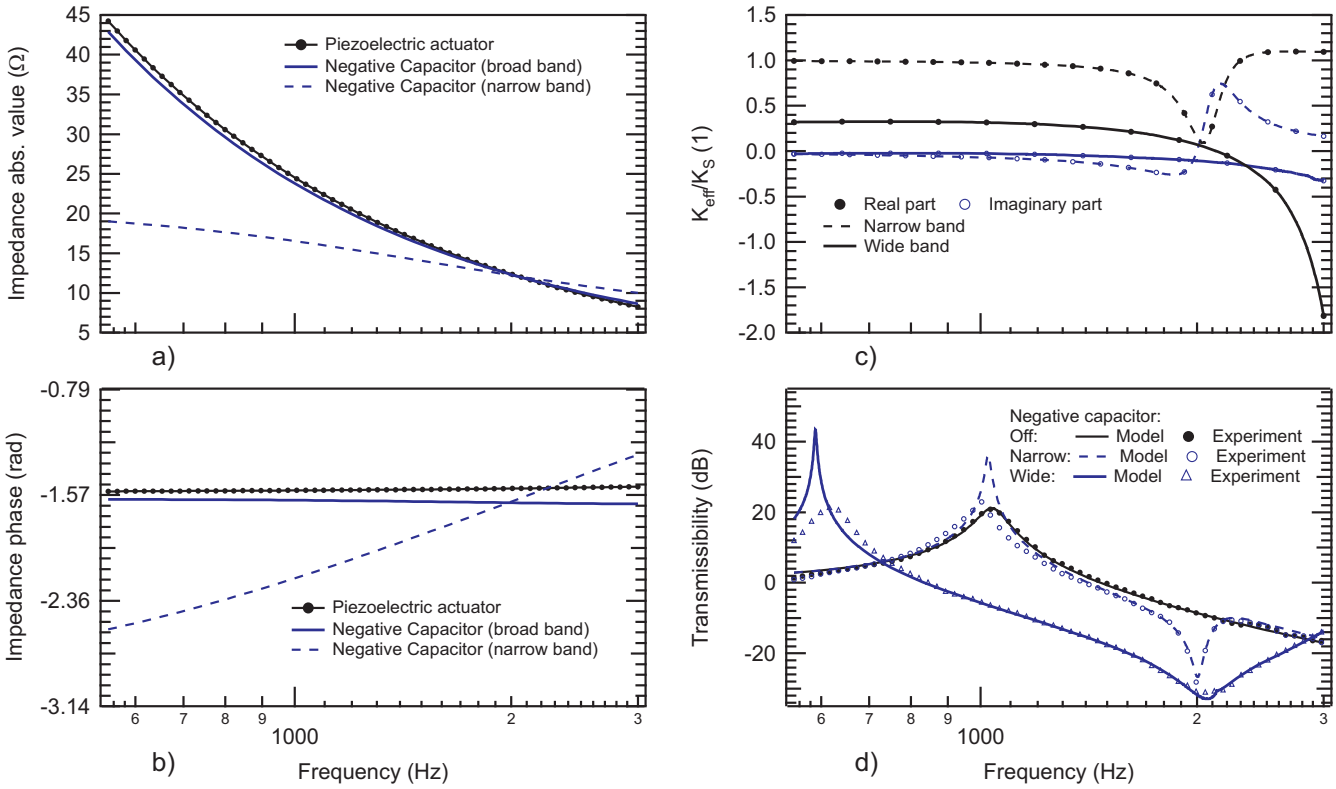

Fig. 5. Frequency dependences of the physical quantities that controls the value of transmissibility of vibrations through the piezoelectric actuator shunted by the negative capacitor shown in Figure 2: a) electric impedance absolute value of the piezoelectric actuator (measured) and the negative capacitor for the narrow frequency range (see Figure 4 a) and broad frequency range (see Figure 4 b) reference impedance Z_1 ; b) electric impedance phase of the piezoelectric actuator (measured) and the minus electric impedance phase of the negative capacitor (calculated), c) calculated real and imaginary parts of the effective spring constant of the piezoelectric actuator shunted by the negative capacitor. Part d) shows the comparison of the measured values of the transmissibility of vibrations through the electrically free piezoelectric actuator (filled circles), through the pizoelectric actuator shunted by the narrow frequency range negative capacitor adjusted at the frequency ω_0 = 2 kHz (empty circles), and the broad frequency range negative capacitor adjusted at the frequency ω_0 = 2 kHz (empty triangles). The measured values of the transmissibility of vibrations are compared with the calculated from the theoretical model.

Instantaneous values of the incident and transmitted vibrations are measured by piezoelectric accelerometers PCB-352. These accelerometers have the resonant frequency at 40 kHz, which ensures a flat and phase correct transmission function in the frequency range of our experiments. Signals from the accelerometers are amplified by ICP amplifier. The force acting on the object of a mass M, which should be isolated from vibrations, is sensed by a force sensor, which is made of a single piezoelectric plate, and converted to voltage via a charge amplifier Kistler 5015A. Such an arrangement requires a calibration, which is done prior experiments in the setup without the damping element. The transfer function of the force sensor is determined using a mass of the object and the signal from the output accelerometer. Electric signals from the accelerometers 1 and 2, force sensor, and the electric voltage applied to the piezoelectric actuator from the negative capacitor are measured and digitized by the data acquisition card NI PCI-6221. PC is also used for the generation of the signal of the incident vibrations and for the measurement of the transmissibility of vibrations. In the Matlab software, a pseudo-random signal with few dominant harmonic components is generated. The output signal from the PC is introduced to the high-voltage amplifier and fed to the piezoelectric shaker.

The adaptive control algorithm for the automatic adjustment of the broad-band negative capacitor is shown in the flow chart in Figure 7. First, the signals from the force sensor and the voltage of the common terminal of the negative capacitor and the piezoelectric actuator (it will be further referenced as the "negative capacitor output") are measured. If the amplitude of the signal form the force sensor exceeds some arbitrarily chosen threshold, the Fast Fourier Transformation is applied to the time dependencies of the measured signals to obtain their amplitude and phase frequency spectra. Then the distribution of the vibration power along the frequency axis is analyzed and the dominant harmonic component with the greatest amplitude is found. This dominant harmonic component is selected to be suppressed. At the selected frequency of the dominant harmonic component, the phase difference between the dominant harmonic components in the signals from the force sensor and from the negative capacitor output. The calculated value of the phase difference is used for the iterative corrections of the values of resistances R_0 and R_1 . Details of the iterative-correction-algorithm are presented in our earlier works [7], [9],

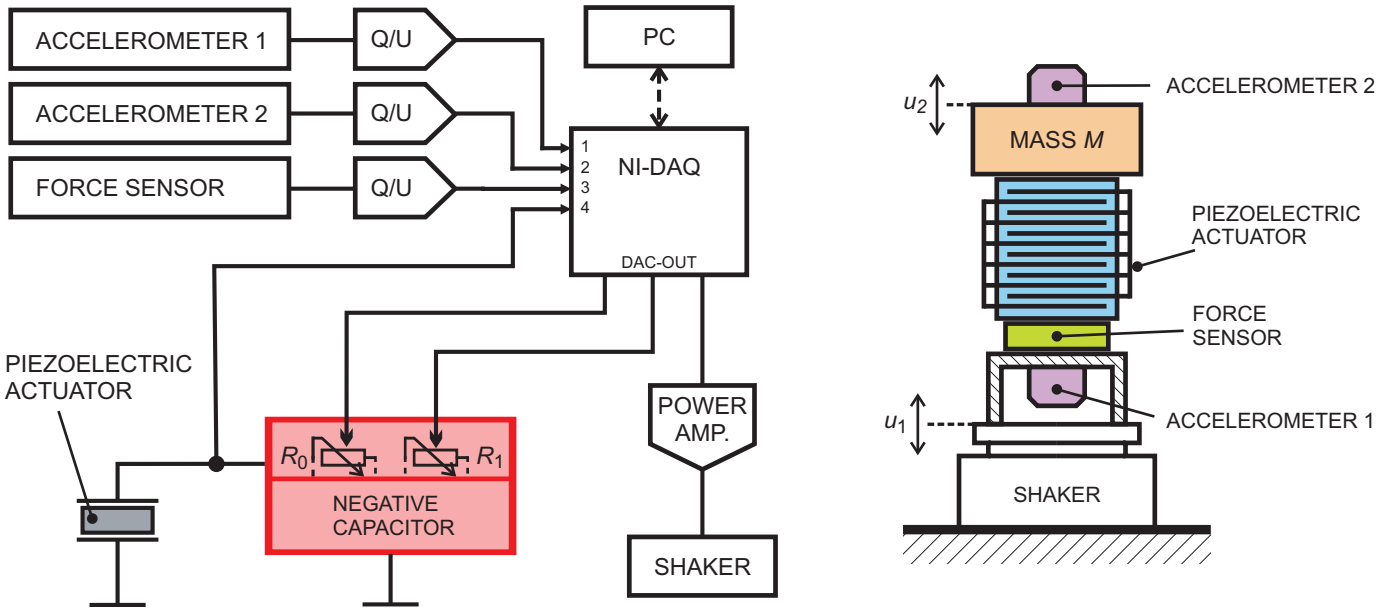

Fig. 6. Adaptive vibration isolation system, which is realized using the piezoelectric actuator shunted by the negative capacitor (see the right-hand side). The control circuit processes the signal from the sensor of the transmitted force F and the signal, which is proportional to the voltage V applied to the piezoelectric actuator, and applies corrections to the adjustment of the NC circuit, when the efficiency of the vibration isolation deteriorates. Vibration isolation system where the negative capacitor is connected to the a piezoelectric actuator. Negative capacitor is adapted to given incident vibrations using computer.

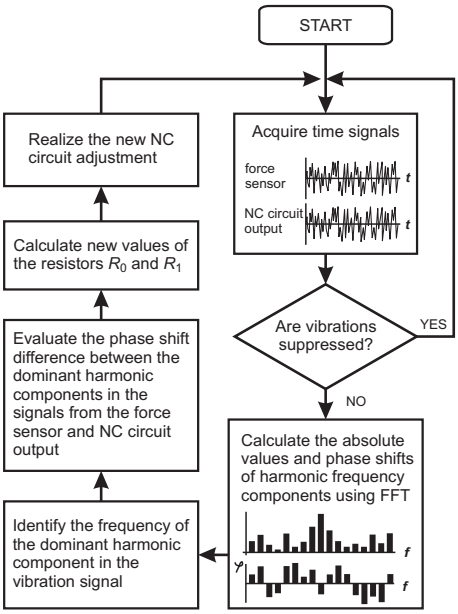

Fig. 7. Flowchart indicating the adaptive control algorithm of the negative capacitance circuit.

[10], [11] that deal with the adaptive vibration isolation device for pure-tone vibrations. After the correction of the value of resistances R_0 and R_1 new time-dependences of the signals from the force sensor and the negative capacitor output are measured and the above steps are periodically repeated until the dominant frequency is suppressed in the force sensor signal to the noise level.

In order to evaluate the performance of the adaptive broad band vibration suppression device, five different vibration signals were generated and applied to the vibration isolation device. The vibration signal consists of a random noise and one dominant harmonic component of given frequency. Figure 8 shows spectra of the five force signals transmitted through the vibration isolation system with different frequencies of the dominant harmonic component. Solid black line indicates the force amplitude spectra transmitted through the piezoelectric actuator disconnected from the negative capacitor. The zero-filled solid blue lines indicate the amplitude spectra of the force transmitted through piezoelectric actuator shunted by the self-adjusted broad-frequency-range-matched negative capacitor.

The frequency dependences of the transmissibility of vibrations through the piezoelectric actuator shunted by the adaptive broad frequency range negative capacitor, which was self-adjusted to the five aforementioned vibration signals, are shown in Figure 9. It is seen that the adaptive control algorithm adjusts the negative capacitor in such a way that the transmissibility of vibration curve has its minimum around the frequency of the dominant harmonic component in the vibration signal. In Figure 9, there are also seen shifts of the mechanical resonant frequency of the system, which is due to the reduction of the effective spring constant of the piezoelectric actuator due to the action of the negative capacitor in the broad frequency range.

V. Conclusions

The theoretical model of the vibration transmission through the piezoelectric actuator shunted by the negative capacitor is presented. The model has been verified on the experiments performed on the narrow frequency (pure tone) vibration isolation. By a proper modification of the reference impedance

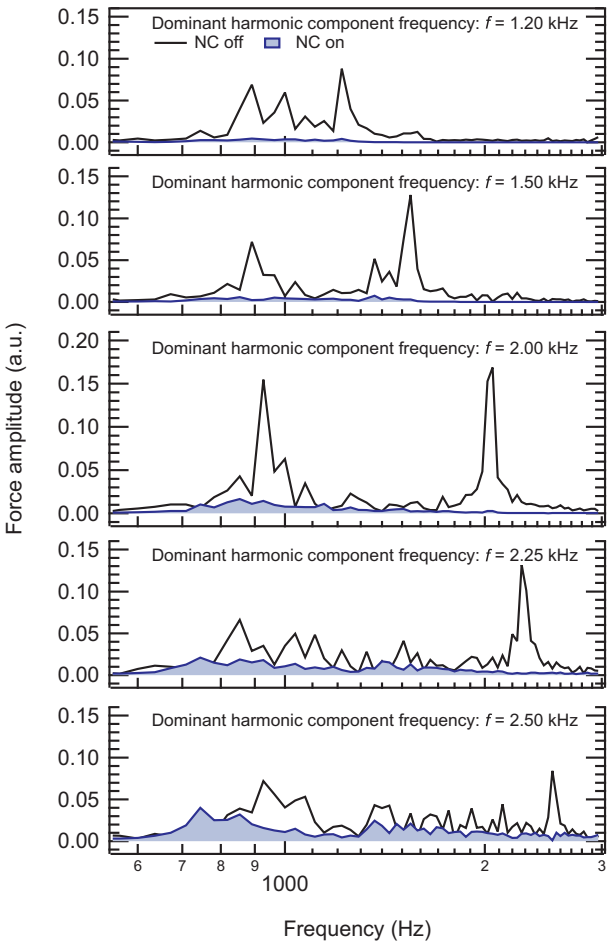

Fig. 8. Spectra of the five force signals transmitted through the vibration isolation system with different frequencies of the dominant harmonic component. Solid black line indicates the force amplitude spectra transmitted through the piezoelectric actuator disconnected from the negative capacitor. The zero-filled solid blue lines indicates the amplitude spectra of the force transmitted through piezoelectric actuator shunted by the self-adjusted broad-frequency-range-matched negative capacitor. The vibration signal consists of a random noise and one dominant harmonic component of given frequency.

of the negative capacitor, it was successfully demonstrated that it is possible to achieve the efficient vibration transmission suppression by 20 dB in a broad frequency range (from 1 kHz to 2 kHz). The adaptive system that makes it possible to adjust the values of the negative capacitor circuit parameters by the analysis of the spectra of the realistic vibration signals was presented.

The advantages of the presented system for the suppression of the vibration transmission stem from its simplicity and broad frequency range of the efficiently suppressed vibrations from 0.5 kHz to 3 kHz. It means that the system can be profitably used to solve acoustic problems of reducing the structure-born noise. If matching the frequency dependencies of the piezoelectric actuator and the negative capacitor capacitances is improved to much broader frequency range, the vibration isolation system can work in a broader frequency range. In addition, the principle of the vibration suppression using the negative capacitor shunted piezoelectric actuator can

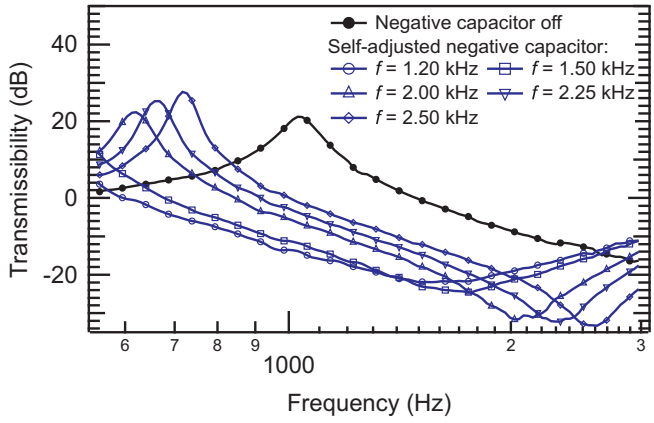

Fig. 9. Frequency dependences of the transmissibility of vibrations through the piezoelectric actuator shunted by the adaptive broad-frequency-range-matched negative capacitor. Each curve corresponds the transfer functions of the adaptive system adjusted to cancel the vibration signal with the force amplitude spectra shown in Figure 8.

be generalized and applied to different types of piezoelectric actuators or different electroacoustic transducers. All in all, the presented realization of the vibration isolation device offers a solution for many real vibration problems.

Aknowledgments

Authors acknowledge the support from the Czech Science Foundation GACR 101/08/1279 and from the student grant SGS 2001/7821 – Interactive mechatronic system in computer engineering.

References

[1] M. Date, M. Kutani, and S. Sakai, "Electrically controlled elasticity utilizing piezoelectric coupling," *Journal of Applied Physics*, vol. 87, no. 2, pp. 863–868, 2000. NIC.

[2] S. O. R. Moheimani and A. J. Fleming, *Piezoelectric Transducers for Vibration Control and Damping*. 2006.

[3] T. Okubo, H. Kodama, K. Kimura, K. Yamamoto, E. Fukada, and M. Date, "Sound-isolation and vibration-isolating efficiency piezoelectric materials connected to negative capacitance circuits," in *Proc. 17th International Congress on Acoustics*, pp. 301–306, 2001.

[4] H. Kodama, T. Okubo, M. Date, and E. Fukada, "Sound reflection and absorption by piezoelectric polymer films," in *Proc. Materials Research Society Symposium*, vol. 698, (506 Keystone Drive, Warrendale, PA 15088-7563 USA), pp. 43–52, Materials Research Society, 2002. Symposium on Rapid Prototyping Technologies-From Tissue Engineering to Conformal Electronics held at the 2001 MRS Fall Meeting, BOSTON, MA, NOV 28-30, 2001.

[5] K. Imoto, M. Nishiura, K. Yamamoto, M. Date, E. Fukada, and Y. Tajitsu, "Elasticity control of piezoelectric lead zirconate titanate (pzt) materials using negative-capacitance circuits," *Japanese Journal of Applied Physics*, vol. 44, no. 9B, pp. 7019–7023, 2005.

[6] K. Tahara, H. Ueda, J. Takarada, K. Imoto, K. Yamamoto, M. Date, E. Fukada, and Y. Tajitsu, "Basic study of application for elasticity control of piezoelectric lead zirconate titanate materials using negative-capacitance circuits to sound shielding technology," *Japanese Journal of Applied Physics*, vol. 45, no. 9B, pp. 7422–7425, 2006.

[7] T. Sluka and P. Mokrý, "Feedback control of piezoelectric actuator elastic properties in a vibration isolation system," *Ferroelectrics*, vol. 351, pp. 51–61, 2007. 8th European Conference on Applications of Polar Dielectrics (ECAPD-8), Metz, FRANCE, SEP 05-08, 2006.

[8] A. Preumont, B. de Marneffe, A. Deraemaeker, and F. Bossens, "The damping of a truss structure with a piezoelectric transducer," *Computers & Structures*, vol. 86, pp. 227–239, FEB 2008. II ECCOMAS Thematic Conference on Smart Structures and Materials, Lisbon, PORTUGAL, JUL 18-21, 2005.

[9] T. S. Sluka, H. Kodama, E. Fukada, and P. Mokrý, "Sound shielding by a piezoelectric membrane and a negative capacitor with feedback control," *IEEE Transactions on Ultrasonics, Ferroelectrics, and Frequency Control*, vol. 55, pp. 1859–1866, AUG 2008.

[10] P. Mokrý, M. Kodejška, and T. Sluka, "On the vibration control using a piezoelectric actuator and a negative capacitor adjusted by a microprocessor," in *IEEE Proceedings of the 16th Intenational Symposium on Application of Ferroelectrics, Nara, Japan*, pp. 786–789, 2007.

[11] M. Kodejška, J. V. Václavík, and P. M. Mokrý, "A system for the vibration suppression in the broad frequency range using a single piezoelectric actuator shunted by a negative capacitor," in *Proceedings of the International Symposium on Application of Ferroelectrics, Edinburgh*, 2010.